# Z-Bar

# Parts ID Manual

## Inventory ID: SB-82215

**Revision: C**

**© Copyright 2025 by DEMTECH Services, Inc.**

**All Rights Reserved**

**Scope of Manual:**

This manual contains procedures for safety, general unpacking, set-up, and operation of your DEMTECH Services, Inc. Z-Bar.

The text of this publication, or any part thereof, may not be reproduced or transmitted in any form or by any means, electronic or mechanical, including photocopying, recording, storage in an information retrieval system, or otherwise, without prior written permission of DEMTECH Services, Inc.

***Notice***

Patents have been granted and/or patent applications are pending or are in the process of preparation on all DEMTECH Services, Inc. developments.

The material in the manual is for informational purposes only and is subject to change without notice.

DEMTECH Services, Inc. assumes no responsibility for any errors that may appear in this manual.

Manual Number: **Z-BAR PARTS ID MANUAL, Revision: C**

DEMTECH Services, Inc.
6414 Capitol Avenue Diamond Springs, CA 95619 U.S.A.
Telephone: (530) 621-3200
Toll Free: (888) 324-9353

Web Site: **www.demtech.com**

# TABLE OF CONTENTS

1 ORDER INSTRUCTIONS .....4

1.1 SB-82215 – Assy, Z-Bar (Parts ID/Parts List).....Page 7

1.2 SB-82200 – Assy, Arm, Upper, Z-Bar (Parts ID/Parts List).....Page 10

1.3 SB-82205 – Assy, Lower Spindle, Z-Bar (Parts ID/Parts List).....Page 13

# 1 Ordering Instructions

Use the exploded assembly diagrams and related parts lists on the following pages to identify replacement parts for the Z-Bar deployment spindle. For a specific assembly diagram identify a part by finding it visually on the diagram and note its Reference Number (REF NO). Next refer to the parts list to identify its corresponding INVENTORY ID. When ordering parts, be sure to specify the INVENTORY ID not the REF NO. "**HARDWARE**" refers to non-stock components, these parts are also available for order by providing the complete part description.

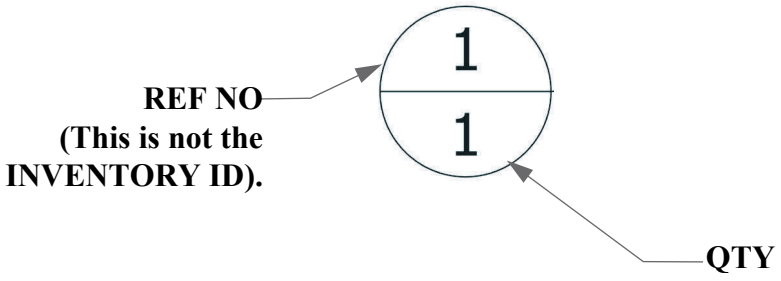

PROPRIETARY DATA NOTICE
This document, prepared exclusively for DEMTECH Services, Inc., is the property of DEMTECH Services, Inc. and as such shall be surrendered to same upon request. This document contains confidential and proprietary information and the data disclosed herein or herewith is not to be reproduced, used, or disclosed in whole or in part to any third person or entity in any manner without prior written permission from DEMTECH Services, Inc..

| DWG NO | SH | REV |
|---|---|---|
| SB-Z-0100/A | 1 | B |

REVISION HISTORY

| ZONE | REV | DESCRIPTION | DATE | APPROVED |
|---|---|---|---|---|
| ALL | 01 | INITIAL PROTOTYPE RELEASE | 06/08/2022 | ISD |
| ALL | 02 | REFLECT CHANGES TO SB-Z-0101/A | 09/30/2022 | ISD |
| ALL | A | ECO-23002, REFLECT VARIOUS COMPONENT CHANGES, INITIAL RELEASE TO PRODUCTION | 01/10/2023 | ISD |
| ALL | B | ECO-23017, REFLECT VARIOUS COMPONENT CHANGES | 04/03/2023 | ISD |

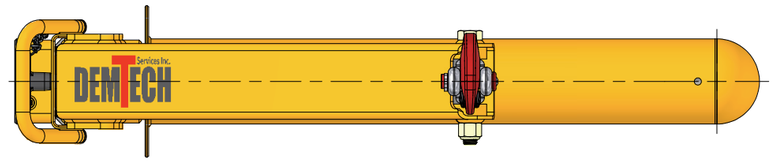


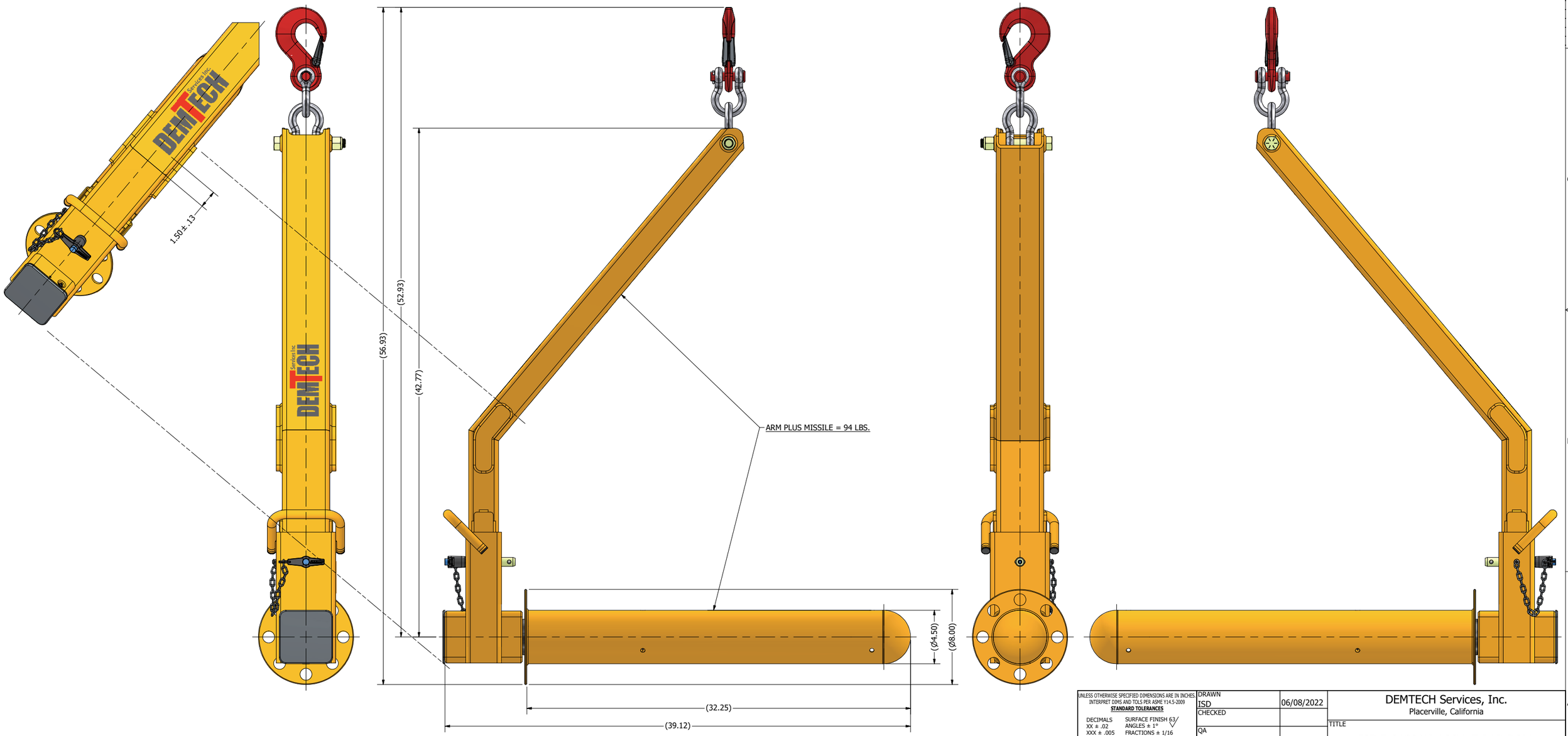


1. THE BALLOON SYMBOL, ϴ, CONTAINS THE REFERENCE NUMBER (REF NO) AND QUANTITY (QTY) OF A SPECIFIED COMPONENT IN THIS ASSY. THE UPPER DIGIT IS THE REF NO AND THE LOWER DIGIT IS THE QTY REQUIRED FOR THIS ASSY.

NOTES (UNLESS OTHERWISE SPECIFIED):

Return to Table of Contents

UNLESS OTHERWISE SPECIFIED DIMENSIONS ARE IN INCHES
INTERPRET DIMS AND TOLS PER ASME Y14.5-2009
STANDARD TOLERANCES
DECIMALS XX ± .02 XXX ± .005
SURFACE FINISH 63√
ANGLES ± 1°
FRACTIONS ± 1/16

MATERIAL: SEE NOTES AND PART LIST

FINISH: N/A

DO NOT SCALE DRAWING

| | | |
|---|---|---|
| DRAWN | ISD | 06/08/2022 |
| CHECKED | | |
| QA | | |
| MFG | | |
| APPROVED | | |

DEMTECH Services, Inc.
Placerville, California

TITLE: [SB-Z-0100/A] ASSY, Z-BAR ROLL DEPLOYMENT SPINDLE (COMPLETE UNIT)

| SIZE | DWG NO | REV |
|---|---|---|
| D | SB-82215 | B |

SCALE 1:4 SHEET 1 OF 4

PROPRIETARY DATA NOTICE
This document, prepared exclusively for DEMTECH Services, Inc., is the property of DEMTECH Services, Inc. and as such shall be surrendered to same upon request. This document contains confidential and proprietary information and the data disclosed herein or herewith is not to be reproduced, used, or disclosed in whole or in part to any third person or entity in any manner without prior written permission from DEMTECH Services, Inc..

| DWG NO | SH | REV |
|---|---|---|
| SB-Z-0100/A | 2 | B |

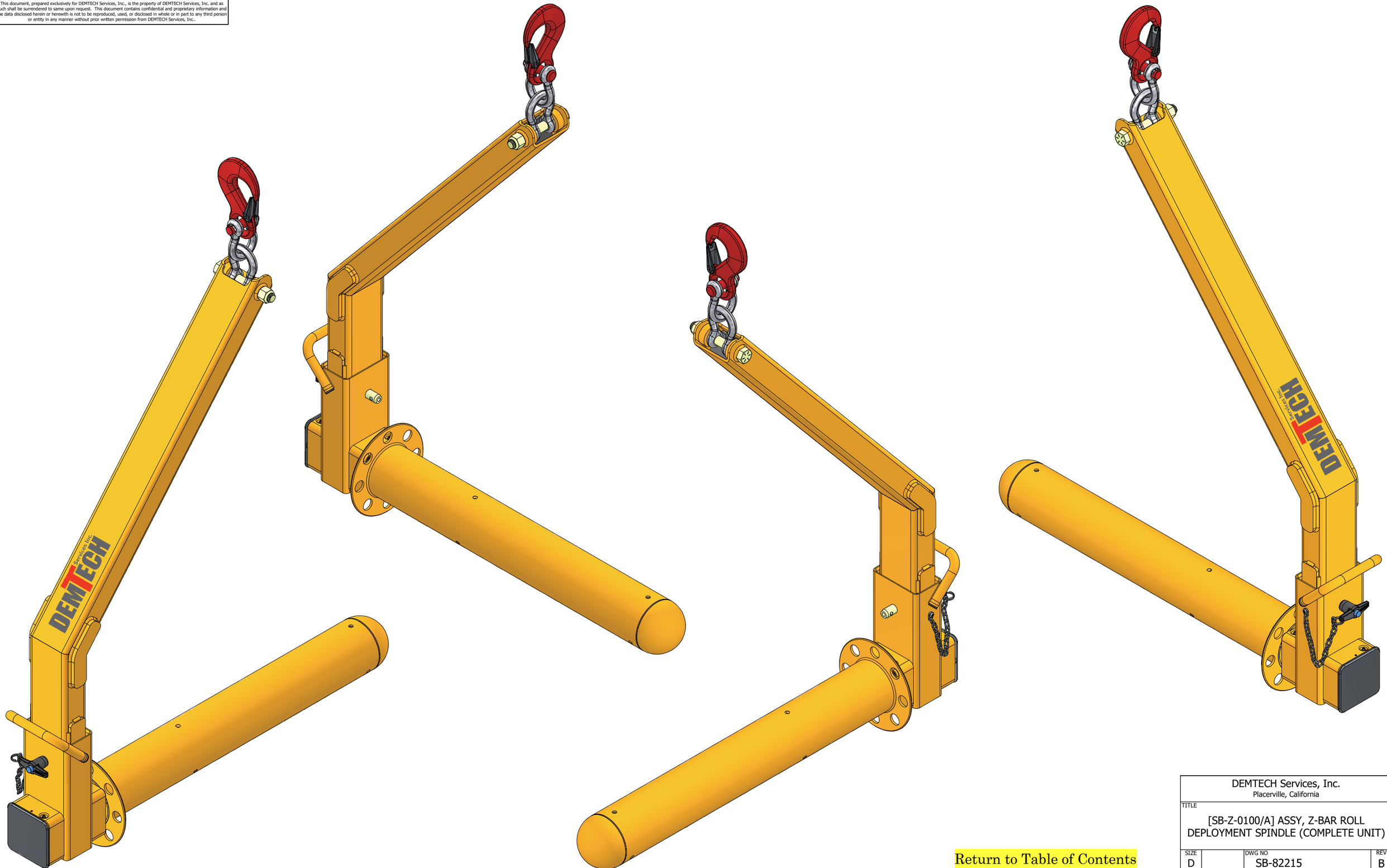


Return to Table of Contents

DEMTECH Services, Inc.
Placerville, California

TITLE
[SB-Z-0100/A] ASSY, Z-BAR ROLL DEPLOYMENT SPINDLE (COMPLETE UNIT)

| SIZE | DWG NO | REV |
|---|---|---|
| D | SB-82215 | B |

SCALE 1:3 SHEET 2 OF 4

PROPRIETARY DATA NOTICE
This document, prepared exclusively for DEMTECH Services, Inc., is the property of DEMTECH Services, Inc. and as such shall be surrendered to same upon request. This document contains confidential and proprietary information and the data disclosed herein or herewith is not to be reproduced, used, or disclosed in whole or in part to any third person or entity in any manner without prior written permission from DEMTECH Services, Inc..



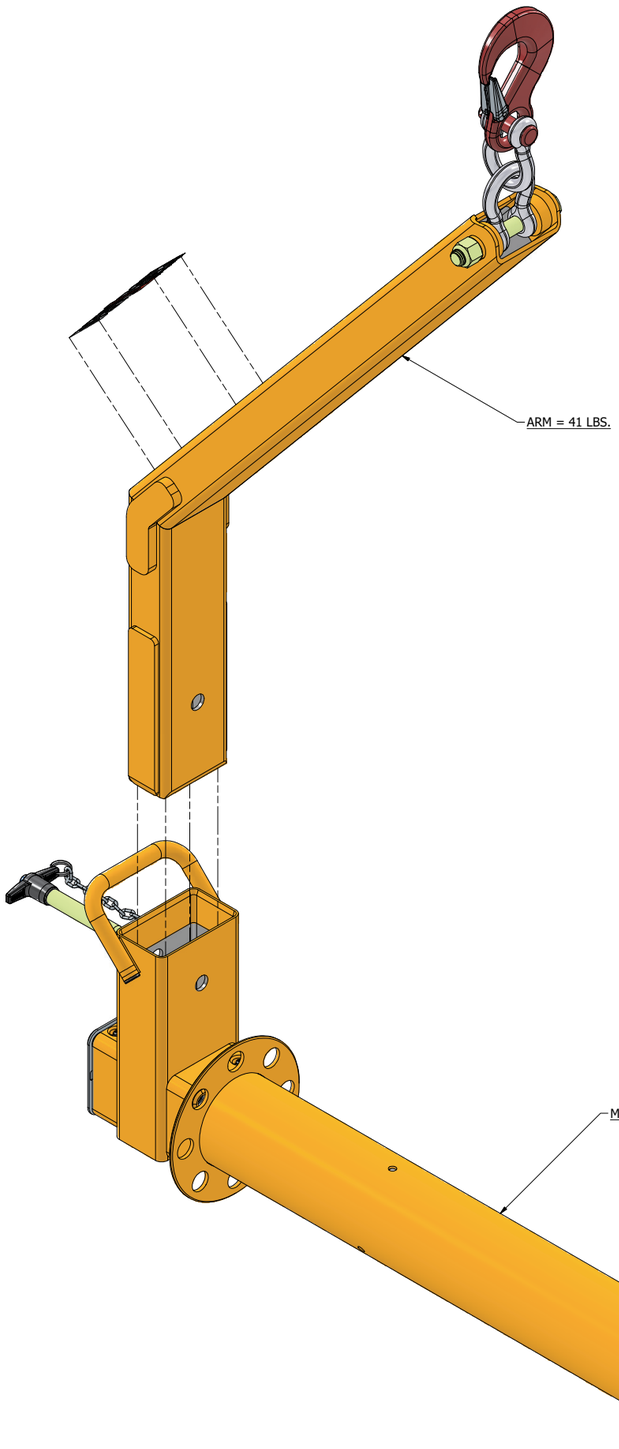


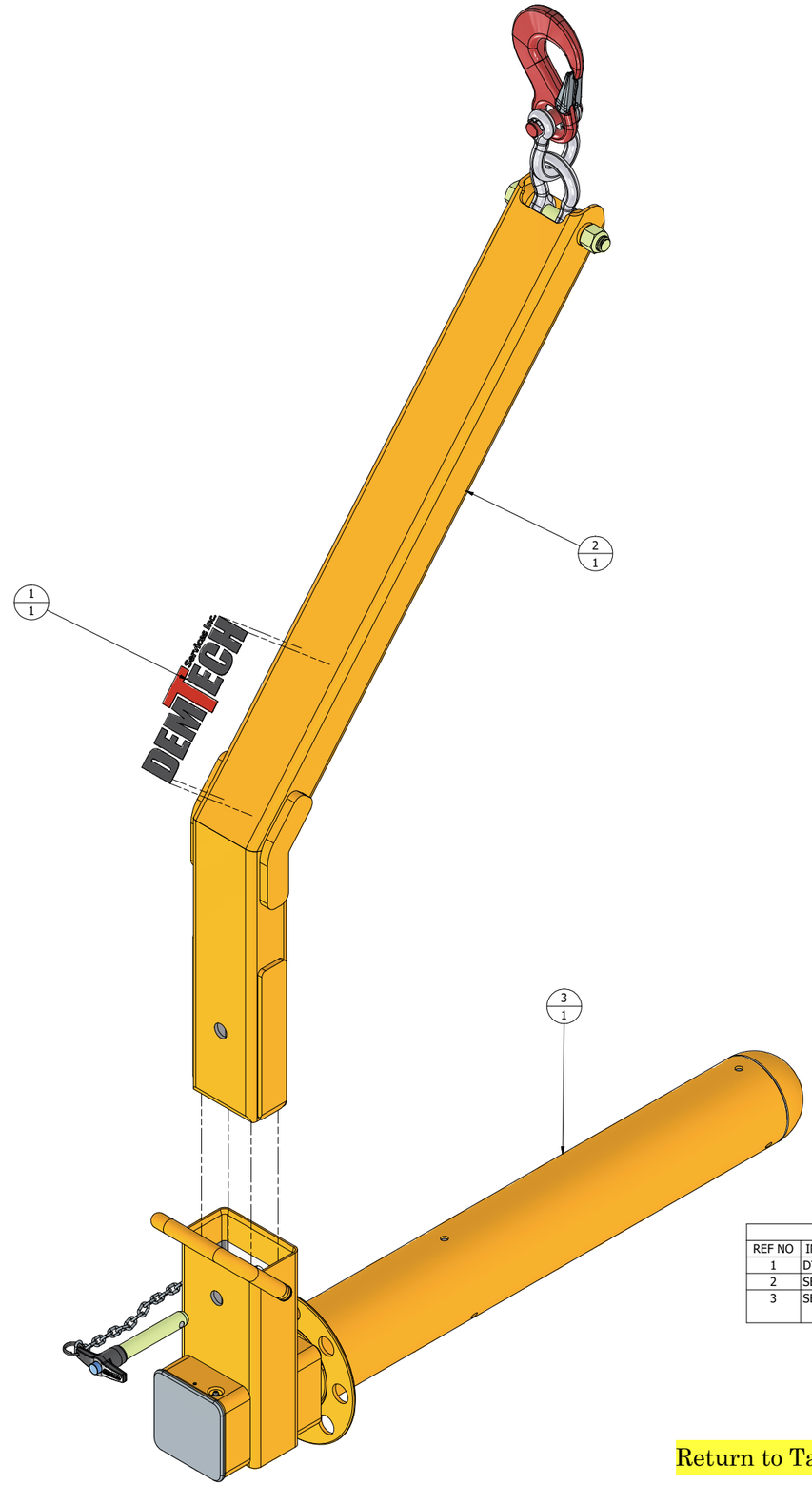


| PARTS LIST | | | |
|---|---|---|---|
| REF NO | INVENTORY ID | DESCRIPTION | QTY |
| 1 | DT-72336 | [LABEL-DEMTECH] LABEL-DEMTECH LOGO, BLACK W/RED "T" | 1 |
| 2 | SB-82200 | [SB-Z-0101/A] ASSY, ARM, Z-BAR (UPPER ARM ASSY ONLY) | 1 |
| 3 | SB-82205 | [SB-Z-0102/A] ASSY, LOWER SPINDLE SYSTEM, Z-BAR (SPINDLE & BEARING ASSY COMPLETE) | 1 |

Return to Table of Contents

DEMTECH Services, Inc.
Placerville, California

TITLE
[SB-Z-0100/A] ASSY, Z-BAR ROLL DEPLOYMENT SPINDLE (COMPLETE UNIT)

| SIZE | DWG NO | REV |
|---|---|---|
| D | SB-82215 | B |

SCALE 1:3 | SHEET 3 OF 4

PROPRIETARY DATA NOTICE
This document, prepared exclusively for DEMTECH Services, Inc., is the property of DEMTECH Services, Inc. and as such shall be surrendered to same upon request. This document contains confidential and proprietary information and the data disclosed herein or herewith is not to be reproduced, used, or disclosed in whole or in part to any third person or entity in any manner without prior written permission from DEMTECH Services, Inc..



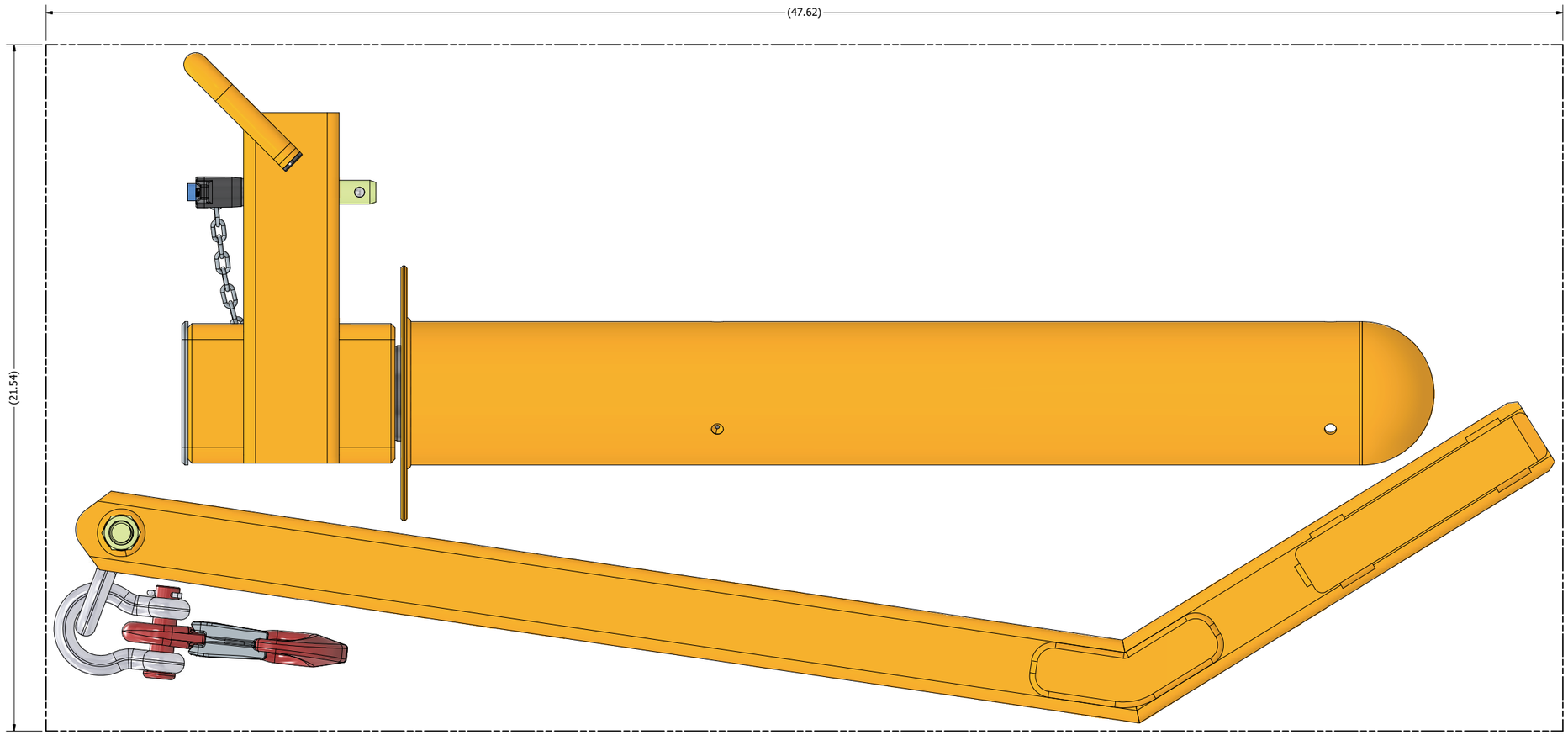


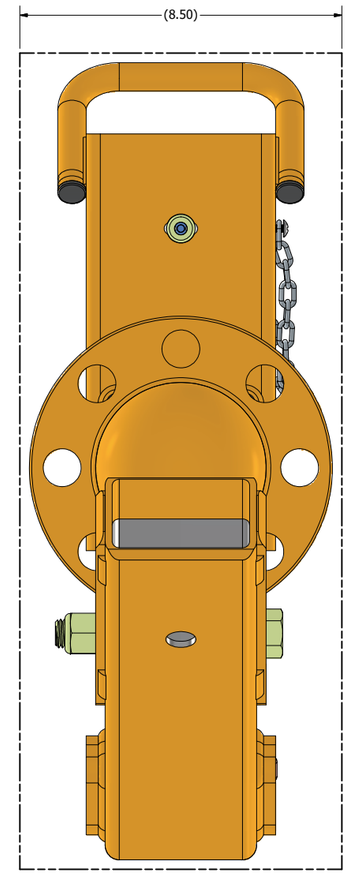


PACK AND SHIP ORIENTATION

Return to Table of Contents

DEMTECH Services, Inc.
Placerville, California

TITLE
[SB-Z-0100/A] ASSY, Z-BAR ROLL DEPLOYMENT SPINDLE (COMPLETE UNIT)

| SIZE | DWG NO | REV |
|---|---|---|
| D | SB-82215 | B |

SCALE 1:2 | SHEET 4 OF 4

PROPRIETARY DATA NOTICE
This document, prepared exclusively for DEMTECH Services, Inc., is the property of DEMTECH Services, Inc. and as such shall be surrendered to same upon request. This document contains confidential and proprietary information and the data disclosed herein or herewith is not to be reproduced, used, or disclosed in whole or in part to any third person or entity in any manner without prior written permission from DEMTECH Services, Inc..

| DWG NO | SH | REV |
|---|---|---|
| SB-Z-0101/A | 1 | A |

REVISION HISTORY

| ZONE | REV | DESCRIPTION | DATE | APPROVED |
|---|---|---|---|---|
| ALL | 01 | INITIAL PROTOTYPE RELEASE | 06/08/2022 | ISD |
| ALL | 02 | REFLECT CHANGES TO SB-Z-001, BOLT WAS 6-1/2" LONG | 09/30/2022 | ISD |
| ALL | A | ECO-23002, REFLECT CHANGES TO SB-Z-001, INITIAL RELEASE TO PRODUCTION | 01/10/2023 | ISD |

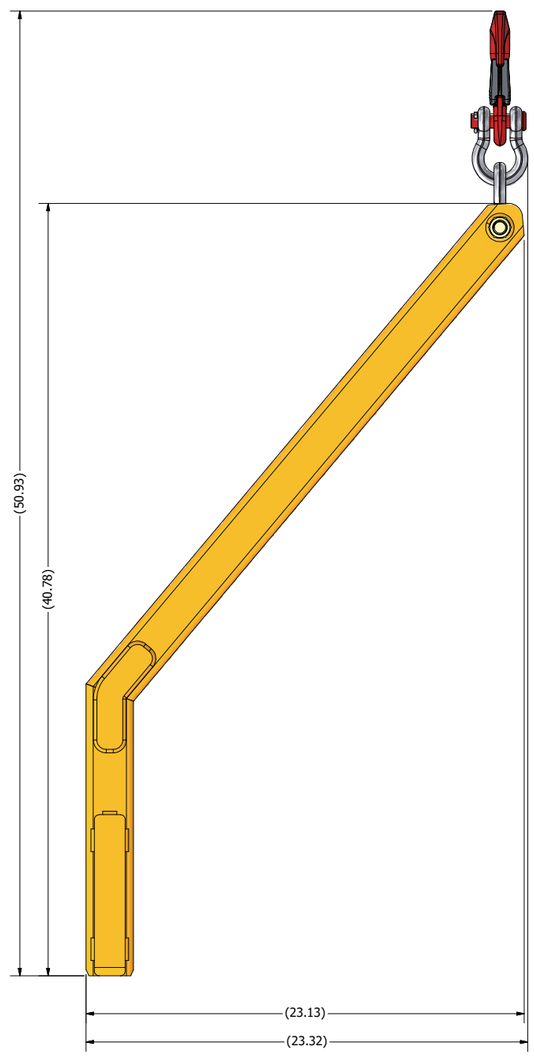


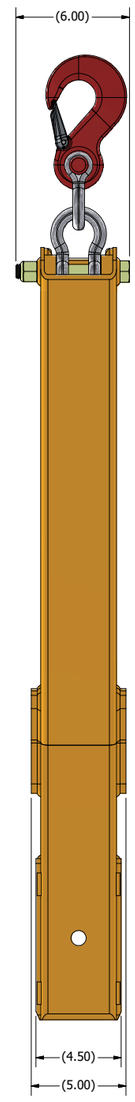


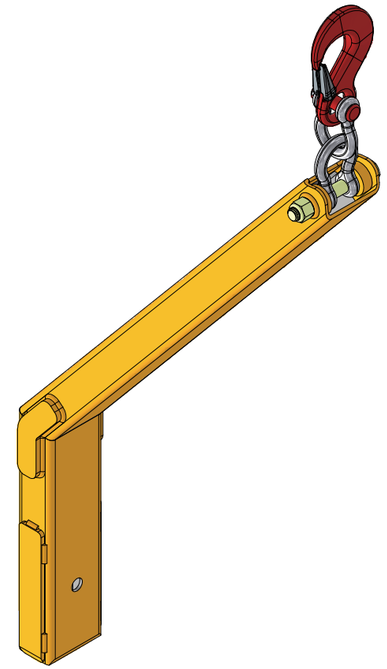

1. THE BALLOON SYMBOL, Θ, CONTAINS THE REFERENCE NUMBER (REF NO) AND QUANTITY (QTY) OF A SPECIFIED COMPONENT IN THIS ASSY. THE UPPER DIGIT IS THE REF NO AND THE LOWER DIGIT IS THE QTY REQUIRED FOR THIS ASSY.

NOTES (UNLESS OTHERWISE SPECIFIED):

Return to Table of Contents

UNLESS OTHERWISE SPECIFIED DIMENSIONS ARE IN INCHES
INTERPRET DIMS AND TOLS PER ASME Y14.5-2009
**STANDARD TOLERANCES**
DECIMALS XX ± .02 XXX ± .005
SURFACE FINISH 63
ANGLES ± 1°
FRACTIONS ± 1/16

MATERIAL: SEE NOTES AND PARTS LIST

FINISH: N/A

DO NOT SCALE DRAWING

| | | |
|---|---|---|
| DRAWN | ISD | 06/08/2022 |
| CHECKED | | |
| QA | | |
| MFG | | |
| APPROVED | | |

DEMTECH Services, Inc.
Placerville, California

TITLE: [SB-Z-0101/A] ASSY, ARM, Z-BAR (UPPER ARM ASSY ONLY)

| SIZE | DWG NO | REV |
|---|---|---|
| D | SB-82200 | A |

SCALE 1:4 SHEET 1 OF 2

PROPRIETARY DATA NOTICE
This document, prepared exclusively for DEMTECH Services, Inc., is the property of DEMTECH Services, Inc. and as such shall be surrendered to same upon request. This document contains confidential and proprietary information and the data disclosed herein or herewith is not to be reproduced, used, or disclosed in whole or in part to any third person or entity in any manner without prior written permission from DEMTECH Services, Inc..

| DWG NO | SH | REV |
|---|---|---|
| SB-Z-0101/A | 2 | A |

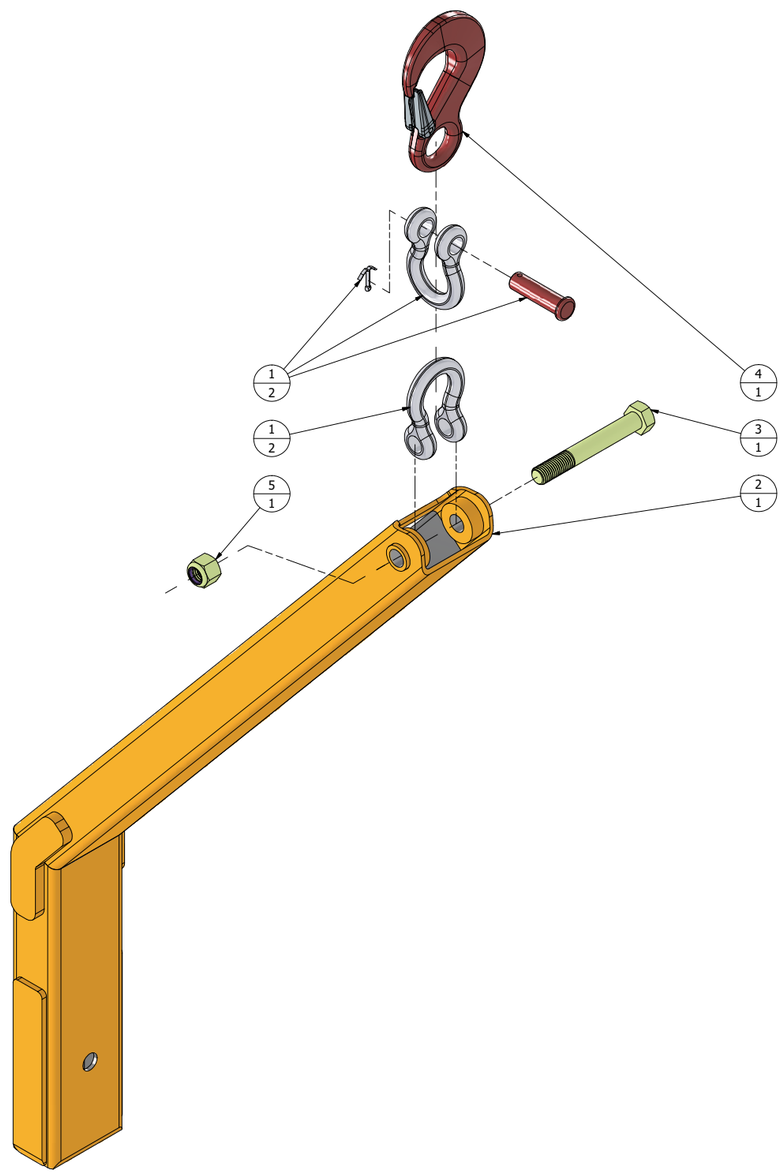


Return to Table of Contents

PARTS LIST

| REF NO | INVENTORY ID | DESCRIPTION | QTY |
|---|---|---|---|
| 1 | SB-72510 | [SB-M-008] SHACLE, BOLT TYPE, 5/8", 3 1/4" TON WLL | 2 |
| 2 | SB-82170 | [SB-Z-001] ARM, UPPER WELDMENT, Z-BAR | 1 |
| 3 | SB-82190 | [SB-Z-012] BOLT, 3/4"-10 X 5-1/2" LONG, HEX HEAD, GRADE 8, ZINC PLATED ALLOY STEEL | 1 |
| 4 | SB-82195 | [SB-Z-008] EYE HOOK, FORGED ALLOY, ID CODE H, 3 TON WORKING LOAD LIMIT, W/ LATCH (CROSBY 1022413) | 1 |
| 5 | HARDWARE | NUT, 3/4"-10, HEX NYLON-INSERT LOCKING, GRADE 8, ZINC PLATED ALLOY STEEL | 1 |

DEMTECH Services, Inc.
Placerville, California

TITLE
[SB-Z-0101/A] ASSY, ARM, Z-BAR (UPPER ARM ASSY ONLY)

| SIZE | DWG NO | REV |
|---|---|---|
| D | SB-82200 | A |

SCALE 1:3 SHEET 2 OF 2

PROPRIETARY DATA NOTICE
This document, prepared exclusively for DEMTECH Services, Inc., is the property of DEMTECH Services, Inc. and as such shall be surrendered to same upon request. This document contains confidential and proprietary information and the data disclosed herein or herewith is not to be reproduced, used, or disclosed in whole or in part to any third person or entity in any manner without prior written permission from DEMTECH Services, Inc..

| DWG NO | SH | REV |
|---|---|---|
| SB-Z-0102/A | 1 | C |

REVISION HISTORY

| ZONE | REV | DESCRIPTION | DATE | APPROVED |
|---|---|---|---|---|
| ALL | 01 | INITIAL PROTOTYPE RELEASE | 06/08/2022 | ISD |
| ALL | A | ECO-23002, REFLECT VARIOUS COMPONENT CHANGES, INITIAL RELEASE TO PRODUCTION | 01/10/2023 | ISD |
| ALL | B | ECO-23017, REFLECT VARIOUS COMPONENT CHANGES | 04/03/2023 | ISD |
| ALL | C | ECO-23033, ADD SB-Z-016 ASSY NOTES AND DIM | 12/13/2024 | ISD |

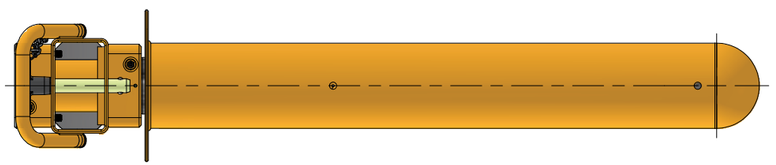

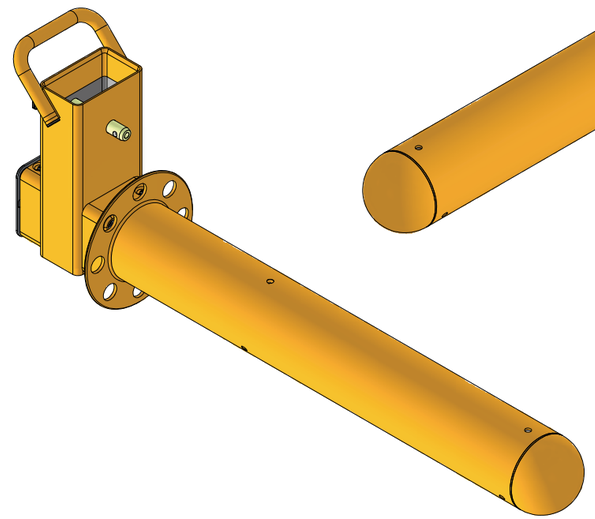

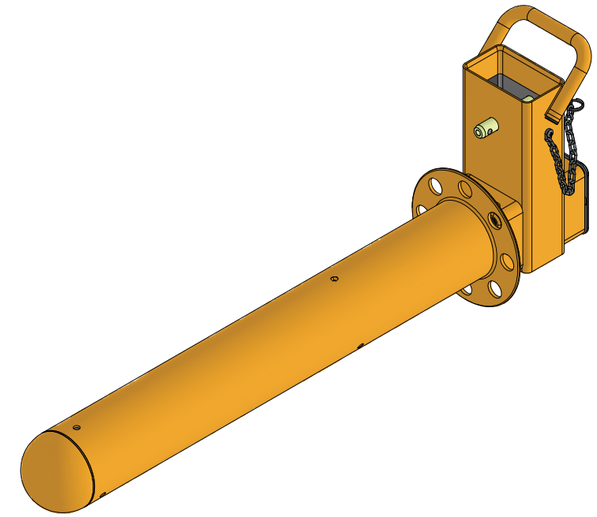

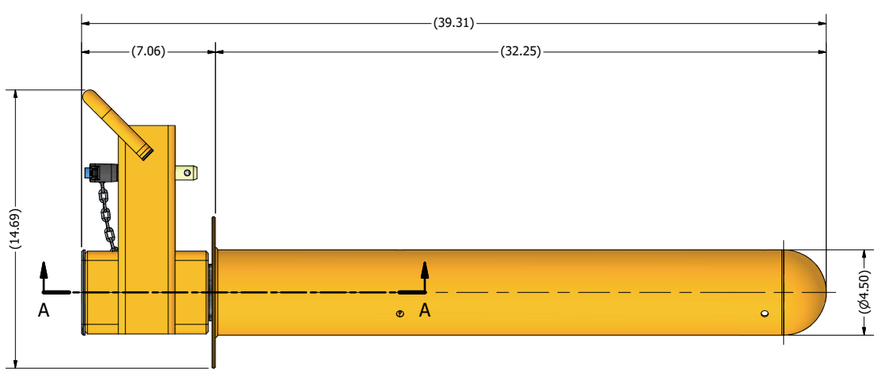


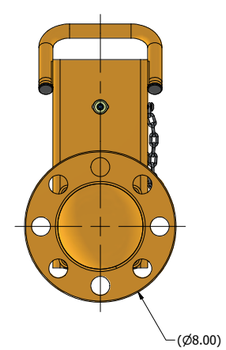


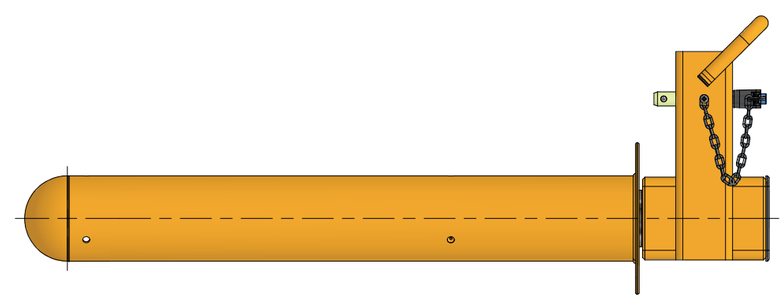

Return to Table of Contents

3. AFTER FULL ASSEMBLY ADD APPROXIMATELY 62 TO 68 CUBIC CENTIMETERS (3.78 TO 4.15 CUBIC INCHES) ALL-PURPOSE AND WEATHER BEARING GREASE TO EACH GREASE FITTING AT COMPONENT NUMBER SB-Z-004.

2. APPLY LOCTITE TO SB-Z-016. MISSILE END CLAMP NUT, AS SHOWN AND TORQUE TO 10FT/LB.

1. THE BALLOON SYMBOL, ϴ, CONTAINS THE REFERENCE NUMBER (REF NO) AND QUANTITY (QTY) OF A SPECIFIED COMPONENT IN THIS ASSY. THE UPPER DIGIT IS THE REF NO AND THE LOWER DIGIT IS THE QTY REQUIRED FOR THIS ASSY.

NOTES (UNLESS OTHERWISE SPECIFIED):

UNLESS OTHERWISE SPECIFIED DIMENSIONS ARE IN INCHES
INTERPRET DIMS AND TOLS PER ASME Y14.5-2009
STANDARD TOLERANCES
DECIMALS XX ± .02 XXX ± .005
SURFACE FINISH 63
ANGLES ± 1°
FRACTIONS ± 1/16

MATERIAL: SEE NOTES AND PARTS LIST

FINISH: N/A

DO NOT SCALE DRAWING

| | | |
|---|---|---|
| DRAWN | ISD | 06/08/2022 |
| CHECKED | | |
| QA | | |
| MFG | | |
| APPROVED | | |

DEMTECH Services, Inc.
Placerville, California

TITLE: [SB-Z-0102/A] ASSY, LOWER SPINDLY SYSTEM, Z-BAR (SPINDLE & BEARING ASSY COMPLETE)

| SIZE | DWG NO | REV |
|---|---|---|
| D | SB-82205 | C |

SCALE 1:4 SHEET 1 OF 3

PROPRIETARY DATA NOTICE
This document, prepared exclusively for DEMTECH Services, Inc., is the property of DEMTECH Services, Inc. and as such shall be surrendered to same upon request. This document contains confidential and proprietary information and the data disclosed herein or herewith is not to be reproduced, used, or disclosed in whole or in part to any third person or entity in any manner without prior written permission from DEMTECH Services, Inc..

| DWG NO | SH | REV |
|---|---|---|
| SB-Z-0102/A | 2 | C |

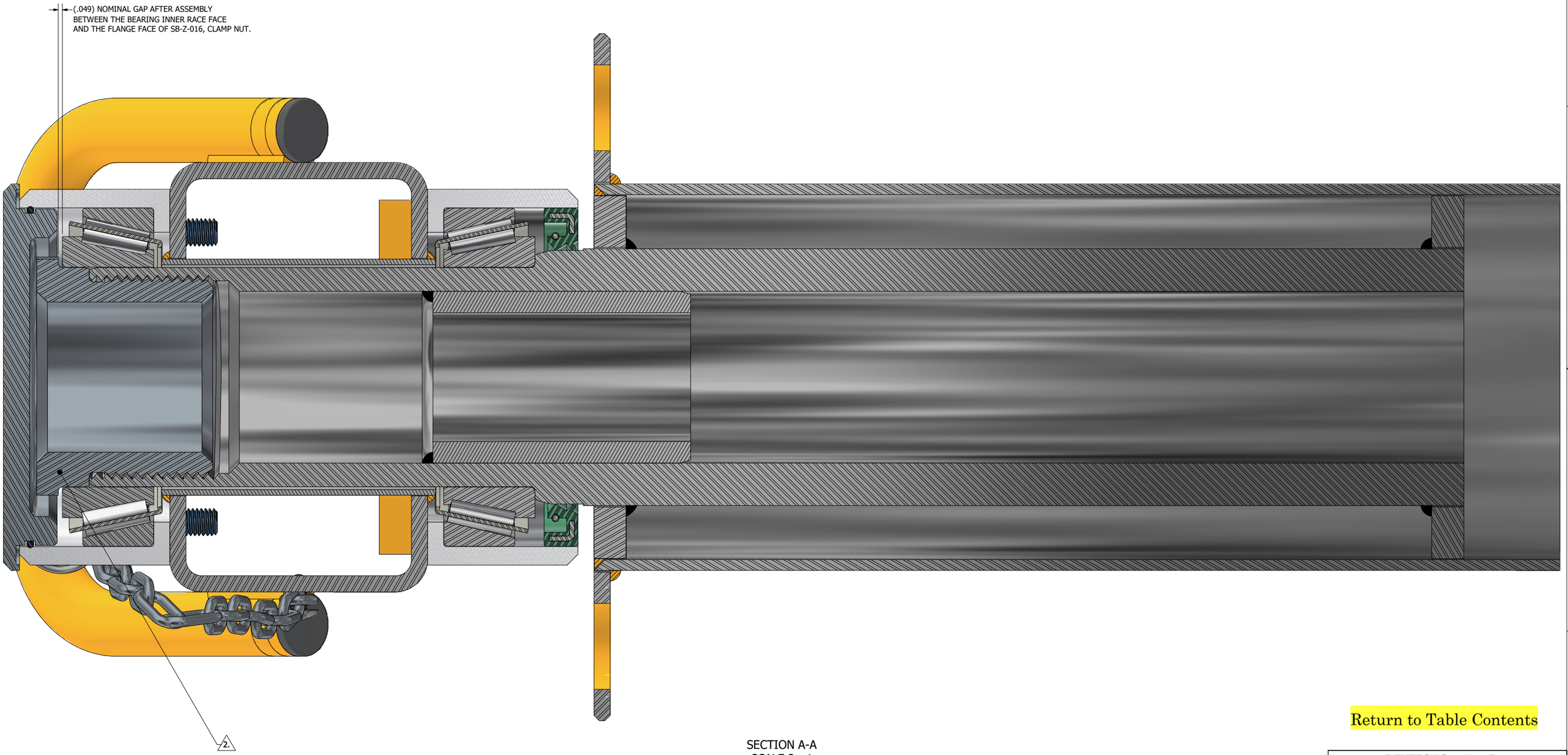


SECTION A-A
SCALE 2 : 1

Return to Table Contents

DEMTECH Services, Inc.
Placerville, California

TITLE
[SB-Z-0102/A] ASSY, LOWER SPINDLY SYSTEM, Z-BAR (SPINDLE & BEARING ASSY COMPLETE)

| SIZE | DWG NO | REV |
|---|---|---|
| D | SB-82205 | C |

SCALE 2:1 SHEET 2 OF 3

PROPRIETARY DATA NOTICE
This document, prepared exclusively for DEMTECH Services, Inc., is the property of DEMTECH Services, Inc. and as such shall be surrendered to same upon request. This document contains confidential and proprietary information and the data disclosed herein or herewith is not to be reproduced, used, or disclosed in whole or in part to any third person or entity in any manner without prior written permission from DEMTECH Services, Inc..



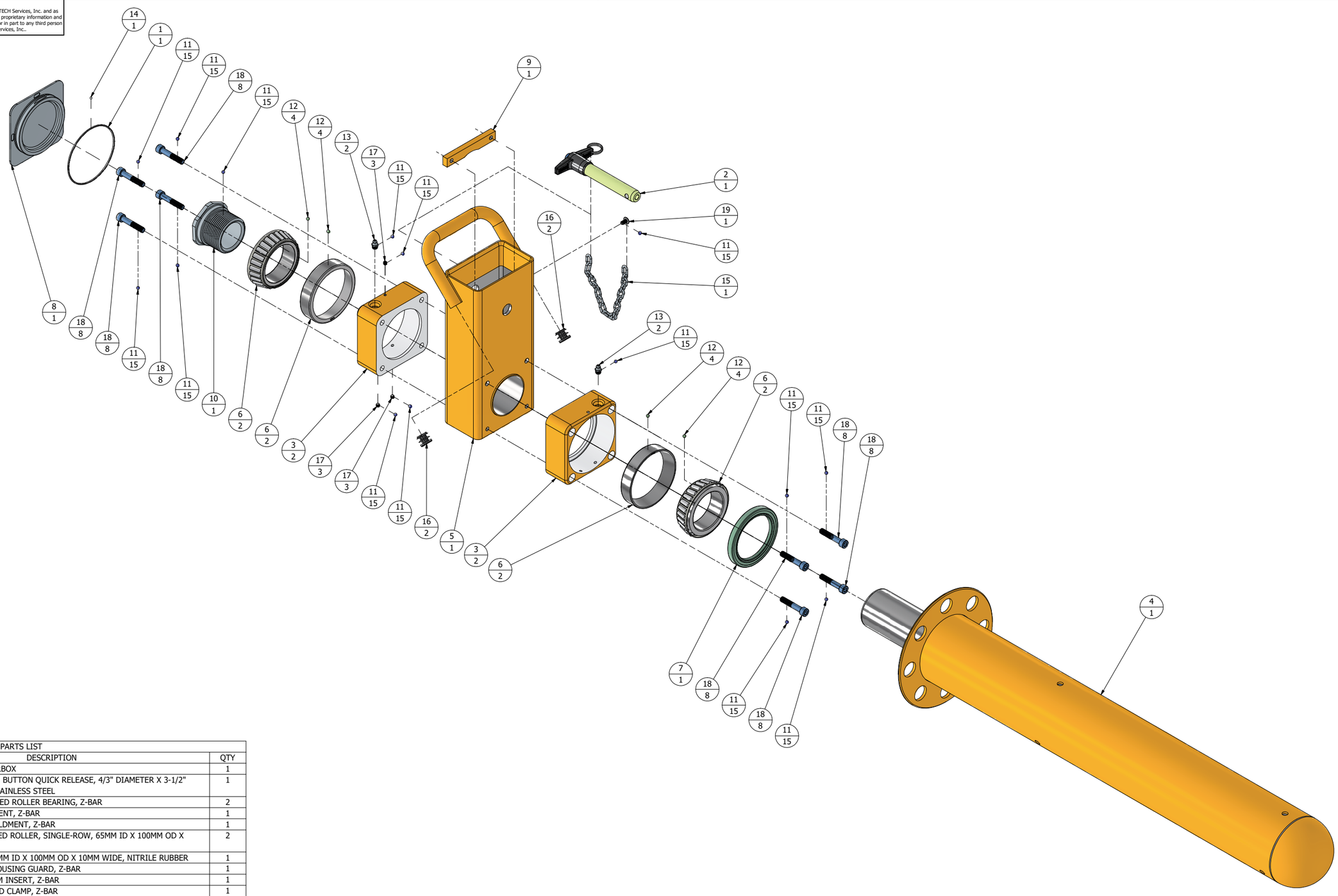


PARTS LIST

| REF NO | INVENTORY ID | DESCRIPTION | QTY |
|---|---|---|---|
| 1 | PX-71432 | [600-D24/O] "O" RING, GEARBOX | 1 |
| 2 | SB-75689 | [SB-Z-014] HANDLE, T, PUSH BUTTON QUICK RELEASE, 4/3" DIAMETER X 3-1/2" USABLE LENGTH, 17-4 PH STAINLESS STEEL | 1 |
| 3 | SB-82075 | [SB-Z-004] HOUSING, TAPERED ROLLER BEARING, Z-BAR | 2 |
| 4 | SB-82101 | [SB-Z-003] MISSILE, WELDMENT, Z-BAR | 1 |
| 5 | SB-82155 | [SB-Z-002] ARM, LOWER WELDMENT, Z-BAR | 1 |
| 6 | SB-82180 | [SB-Z-010] BEARING, TAPERED ROLLER, SINGLE-ROW, 65MM ID X 100MM OD X 27MM WIDE, STEEL | 2 |
| 7 | SB-82185 | [SB-Z-011] SEAL, SHAFT, 75MM ID X 100MM OD X 10MM WIDE, NITRILE RUBBER | 1 |
| 8 | SB-82562 | [SB-Z-013] CAP, BEARING HOUSING GUARD, Z-BAR | 1 |
| 9 | SB-85205 | [SB-Z-007] STOP, UPPER ARM INSERT, Z-BAR | 1 |
| 10 | SB-85215 | [SB-Z-016] NUT, MISSILE END CLAMP, Z-BAR | 1 |
| 11 | HARDWARE | ADHESIVE, THREADLOCKING LIQUID, BLUE, THICK MEDIUM STRENGTH | 15 |
| 12 | HARDWARE | ADHESIVE, BEARING RETAINING COMPOUND, GREEN #603 | 4 |
| 13 | HARDWARE | FITTING, GREASE, STRAIGHT, M8 X 1.0 MALE X 15mm OAL X 9mm HEX, ZINC PLATED STEEL | 2 |
| 14 | HARDWARE | GREASE, O-RING, SYNTHETIC SILICONE, OR EQUIVALENT | 1 |
| 15 | HARDWARE | CHAIN, LIGHT DUTY, SIZE 4 X 16 LINKS, ZINC PLATED STEEL | 1 |
| 16 | HARDWARE | PLUG, SNAP-IN, 3/4" HEAD DIAMETER, BLACK POLYETHYLENE | 2 |
| 17 | HARDWARE | SCREW, SET, M5 X 0.8 X 6mm LONG, CONE-POINT ALLEN, 18-8 STAINLESS STEEL | 3 |
| 18 | HARDWARE | SCREW, M8 X 1.25mm X 45mm LONG, SOCKET HEAD CAP, CLASS 12.9, BLUE DYED ZINC PLATED ALLOY STEEL | 8 |
| 19 | HARDWARE | SCREW, M5 X 0.8 X 10mm LONG, TRUSS HEAD PHILLIPS, 316 STAINLESS STEEL | 1 |

Return to Table of Contents

DEMTECH Services, Inc.
Placerville, California

TITLE
[SB-Z-0102/A] ASSY, LOWER SPINDLY SYSTEM, Z-BAR (SPINDLE & BEARING ASSY COMPLETE)

| SIZE | DWG NO | REV |
|---|---|---|
| D | SB-82205 | C |

SCALE 1:3 | SHEET 3 OF 3