Spreader-Bar

Spreader Bar shown with Z-bars and Adjustable Collars

Parts ID Manual

Inventory ID: SB-73525

Revision: B

DOC-0022

© Copyright 2025 by DEMTECH Services, Inc.

All Rights Reserved

Scope of Manual:

This manual contains procedures for safety, general unpacking, set-up, and operation of your DEMTECH Services, Inc. Spreader-Bar.

The text of this publication, or any part thereof, may not be reproduced or transmitted in any form or by any means, electronic or mechanical, including photocopying, recording, storage in an information retrieval system, or otherwise, without prior written permission of DEMTECH Services, Inc.

Notice

Patents have been granted and/or patent applications are pending or are in the process of preparation on all DEMTECH Services, Inc. developments.

The material in the manual is for informational purposes only and is subject to change without notice.

DEMTECH Services, Inc. assumes no responsibility for any errors that may appear in this manual.

Manual Number: **SB- PARTS ID MANUAL, Revision: B**

DEMTECH Services, Inc.
6414 Capitol Avenue Diamond Springs, CA 95619 U.S.A.
Telephone: (530) 621-3200
Toll Free: (888) 324-9353

Web Site: **www.demtech.com**

TABLE OF CONTENTS

1 ORDER INSTRUCTIONS.....PAGE 4

1.1 SB-73525 -- ASSY, LIFTING SPREADER BAR FRAME(Parts ID/Parts List).....Page 5-6

1.2 SB-73528 -- ASSY, LIFTING SPREADER BAR, LOAD TESTED & CERTIFIED COMPLETE W/LIFT CABLES & MISSILES (Parts ID/Parts List).....Page 7-9

1.3 SB-72513 -- ASSY, MISSILE (SPINDLE), SPREADER BAR ROLL DEPLOYMENT SYSTEM (Parts ID/Parts List).....Page 10-12

1.4 SB-73529 -- ASSY, LIFTING SPREADER BAR, W/ Z-BAR SPINDLES, COMPLETE (Parts ID/Parts List).....Page 13-15

1.5 SB- 82215 -- ASSY, Z-BAR ROLL DEPLOYMENT SPINDLE (COMPLETE UNIT) (Parts ID/Parts List).....Page 16-19

1.6 SB-82200 -- ASSY, ARM, Z-BAR (UPPER ARM ASSY ONLY) (Parts ID/Parts List).....Page 20-21

1.7 SB-82205 -- ASSY, LOWER SPINDLY SYSTEM, Z-BAR (SPINDLE & BEARING ASSY COMPLETE) (Parts ID/Parts List).....Pages 22-24

1.7 SB-72620 -- ASSY, ADJUSTABLE COLLAR, SPREADER-BAR (Parts ID/Parts List.....Page 25

1 Ordering Instructions

Use the exploded assembly diagrams and related parts lists on the following pages to identify replacement parts for the Spreader-Bar deployment system. For a specific assembly diagram identify a part by finding it visually on the diagram and note its Reference Number (REF NO). Next refer to the parts list to identify its corresponding INVENTORY ID. When ordering parts, be sure to specify the INVENTORY ID not the REF NO. "**HARDWARE**" refers to non-stock components, these parts are also available for order by providing the complete part description.

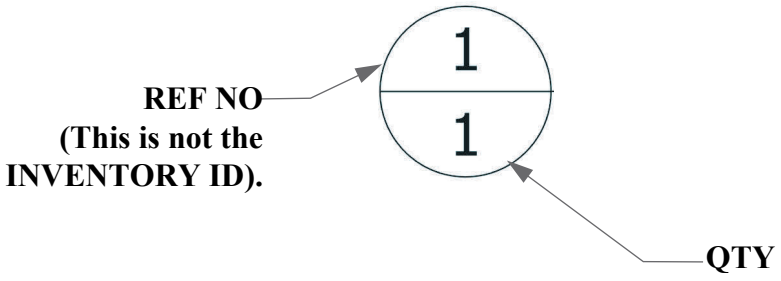

PROPRIETARY DATA NOTICE
This document, prepared exclusively for DEMTECH Services, Inc., is the property of DEMTECH Services, Inc. and as such shall be surrendered to same upon request. This document contains confidential and proprietary information and the data disclosed herein or herewith is not to be reproduced, used, or disclosed in whole or in part to any third person or entity in any manner without prior written permission from DEMTECH Services, Inc..

DWG NO	SH	REV
SB-0103/A	1	C

REVISION HISTORY

ZONE	REV	DESCRIPTION	DATE	APPROVED
ALL	A	ECO-25002, INITIAL RELEASE TO PRODUCTION	03/10/2025	ISD
ALL	B	ECO-25011, CHANGES FOR TOP SHACKLE LIFT	06/24/2025	ISD
ALL	C	ECO-25018, REPLACED SB-002 W/ SB-002-11K	08/27/2025	FRK

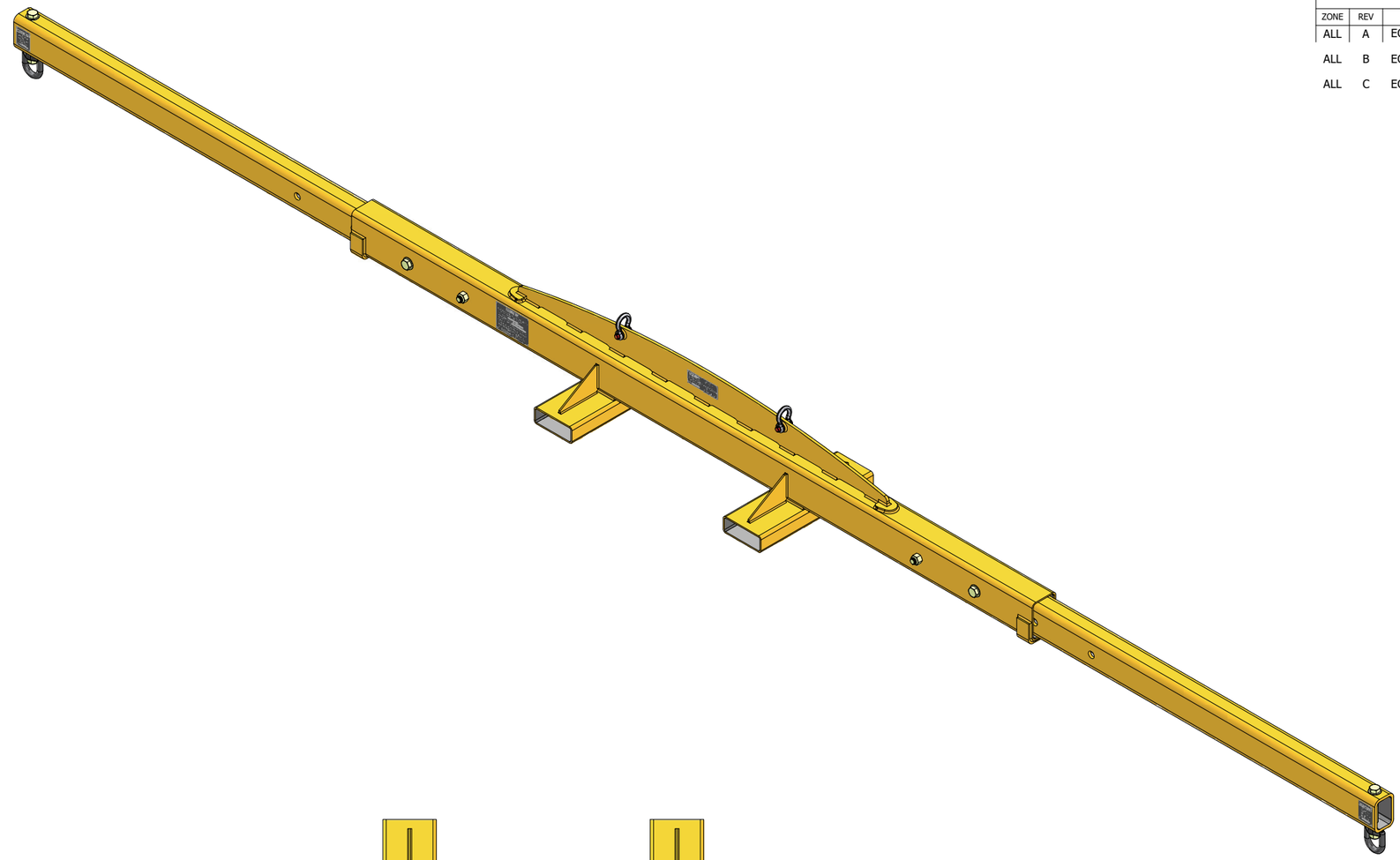

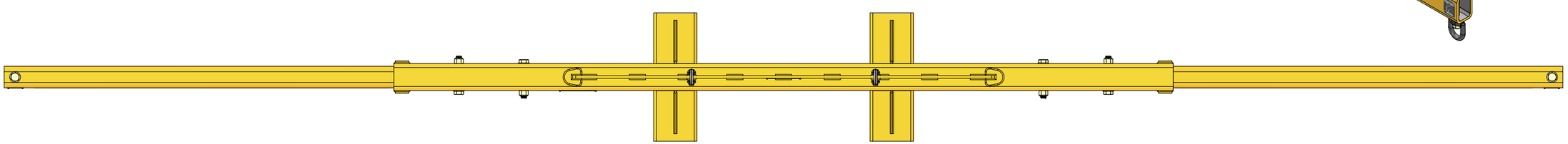

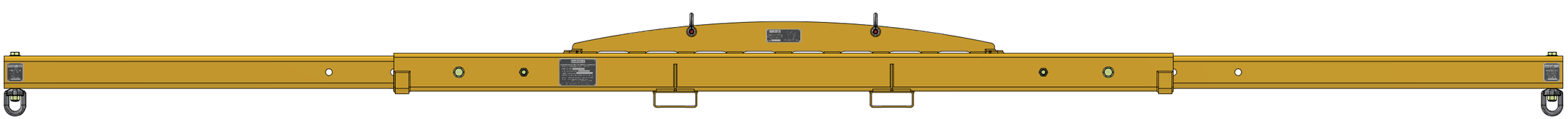

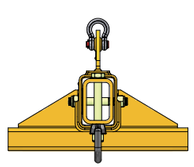

Return to Table of Contents

2.TEST COMPLETED ASSEMBLY IN ACCORDANCE WITH THE MOST RECENT RELEASE COPY OF DEMTECH SERVICES, INC. DOCUMENT NUMBER DOC-0015, TEST PLAN, LIFTING SPREADER BAR ASSEMBLY (LSBA), PART NUMBER SB-0103/A.

1. THE BALLOON SYMBOL, Θ, CONTAINS THE REFERENCE NUMBER (REF NO) AND QUANTITY (QTY) OF A SPECIFIED COMPONENT IN THIS ASSY. THE UPPER DIGIT IS THE REF NO AND THE LOWER DIGIT IS THE QTY REQUIRED FOR THIS ASSY.

NOTES (UNLESS OTHERWISE SPECIFIED):

UNLESS OTHERWISE SPECIFIED DIMENSIONS ARE IN INCHES
INTERPRET DIMS AND TOLS PER ASME Y14.5-2009
STANDARD TOLERANCES

DECIMALS XX ± .02 XXX ± .005
SURFACE FINISH 63
ANGLES ± 1°
FRACTIONS ± 1/16

MATERIAL: SEE PARTS LIST

FINISH: N/A

DO NOT SCALE DRAWING

DRAWN	ISD	03/10/2025
CHECKED		
QA		
MFG		
APPROVED		

DEMTECH Services, Inc.
Placerville, California

TITLE: [SB-0103/A] ASSY, LIFTING SPREADER BAR FRAME

SIZE	DWG NO	REV
D	SB-73525	C

SCALE 1:10 SHEET 1 OF 2

DWG NO	SH	REV
SB-0103/A	2	C

PROPRIETARY DATA NOTICE
This document, prepared exclusively for DEMTECH Services, Inc., is the property of DEMTECH Services, Inc. and as such shall be surrendered to same upon request. This document contains confidential and proprietary information and the data disclosed herein or herewith is not to be reproduced, used, or disclosed in whole or in part to any third person or entity in any manner without prior written permission from DEMTECH Services, Inc..

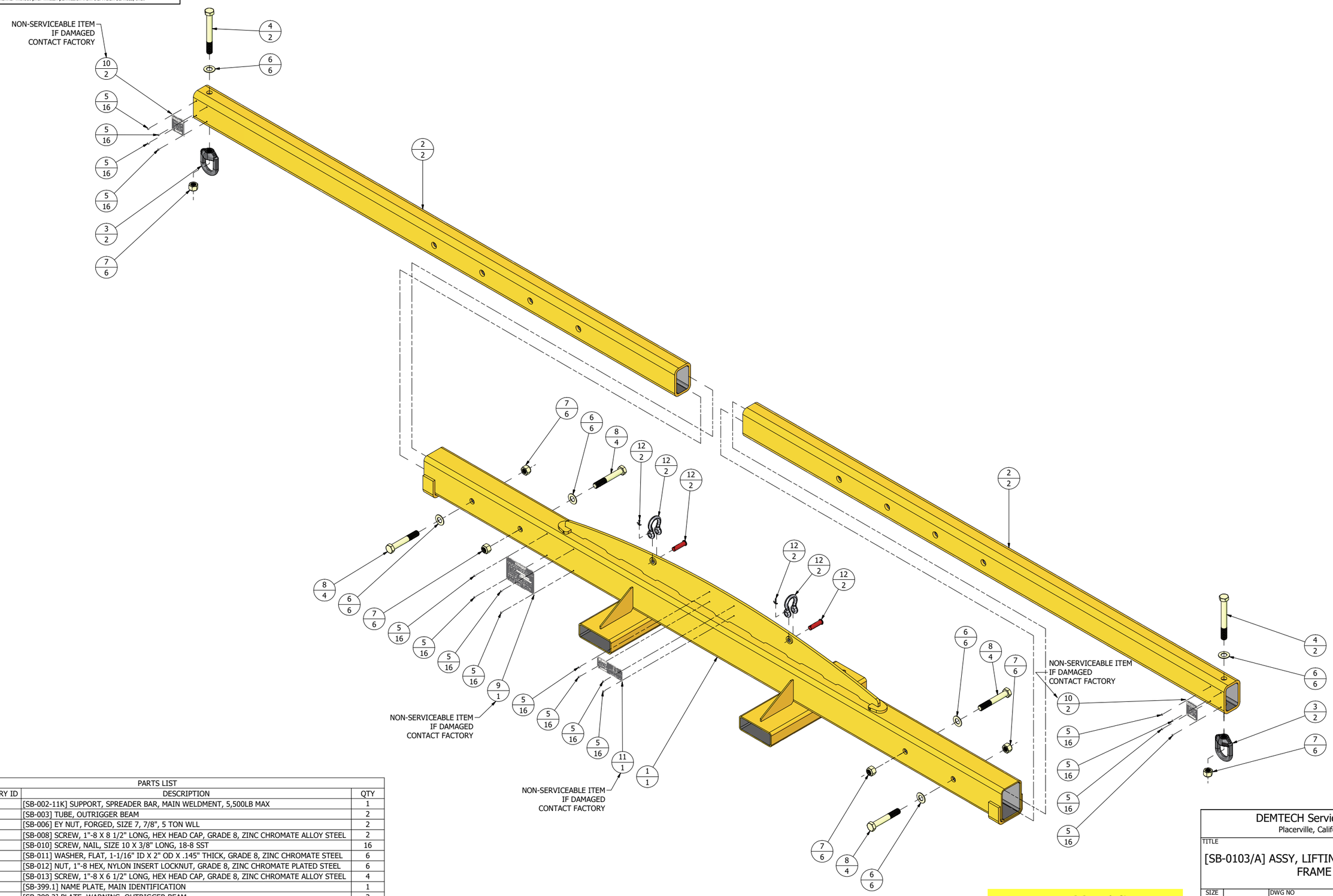

PARTS LIST

REF NO	INVENTORY ID	DESCRIPTION	QTY
1	SB-72477	[SB-002-11K] SUPPORT, SPREADER BAR, MAIN WELDMENT, 5,500LB MAX	1
2	SB-72481	[SB-003] TUBE, OUTRIGGER BEAM	2
3	SB-72485	[SB-006] EY NUT, FORGED, SIZE 7, 7/8", 5 TON WLL	2
4	SB-72486	[SB-008] SCREW, 1"-8 X 8 1/2" LONG, HEX HEAD CAP, GRADE 8, ZINC CHROMATE ALLOY STEEL	2
5	SB-72487	[SB-010] SCREW, NAIL, SIZE 10 X 3/8" LONG, 18-8 SST	16
6	SB-72490	[SB-011] WASHER, FLAT, 1-1/16" ID X 2" OD X .145" THICK, GRADE 8, ZINC CHROMATE STEEL	6
7	SB-72491	[SB-012] NUT, 1"-8 HEX, NYLON INSERT LOCKNUT, GRADE 8, ZINC CHROMATE PLATED STEEL	6
8	SB-72492	[SB-013] SCREW, 1"-8 X 6 1/2" LONG, HEX HEAD CAP, GRADE 8, ZINC CHROMATE ALLOY STEEL	4
9	SB-72493	[SB-399.1] NAME PLATE, MAIN IDENTIFICATION	1
10	SB-72494	[SB-399.2] PLATE, WARNING, OUTRIGGER BEAM	2
11	SB-72502	[SB-399.4] NAMEPLATE, SLING LIFT POINT	1
12	SB-72510	[SB-M-008] SHACLE, BOLT TYPE, 5/8", 3 1/4" TON WLL	2

Return to table of Contents

DEMTECH Services, Inc.
Placerville, California

TITLE
[SB-0103/A] ASSY, LIFTING SPREADER BAR FRAME

SIZE	DWG NO	REV
D	SB-73525	C

SCALE 1:8 SHEET 2 OF 2

PROPRIETARY DATA NOTICE
This document, prepared exclusively for DEMTECH Services, Inc., is the property of DEMTECH Services, Inc. and as such shall be surrendered to same upon request. This document contains confidential and proprietary information and the data disclosed herein or herewith is not to be reproduced, used, or disclosed in whole or in part to any third person or entity in any manner without prior written permission from DEMTECH Services, Inc..

DWG NO	SH	REV
SB-0201/A	1	A

REVISION HISTORY

ZONE	REV	DESCRIPTION	DATE	APPROVED
ALL	A	ECO-25018, INITIAL RELEASE TO PRODUCTION	08/27/2025	FRK

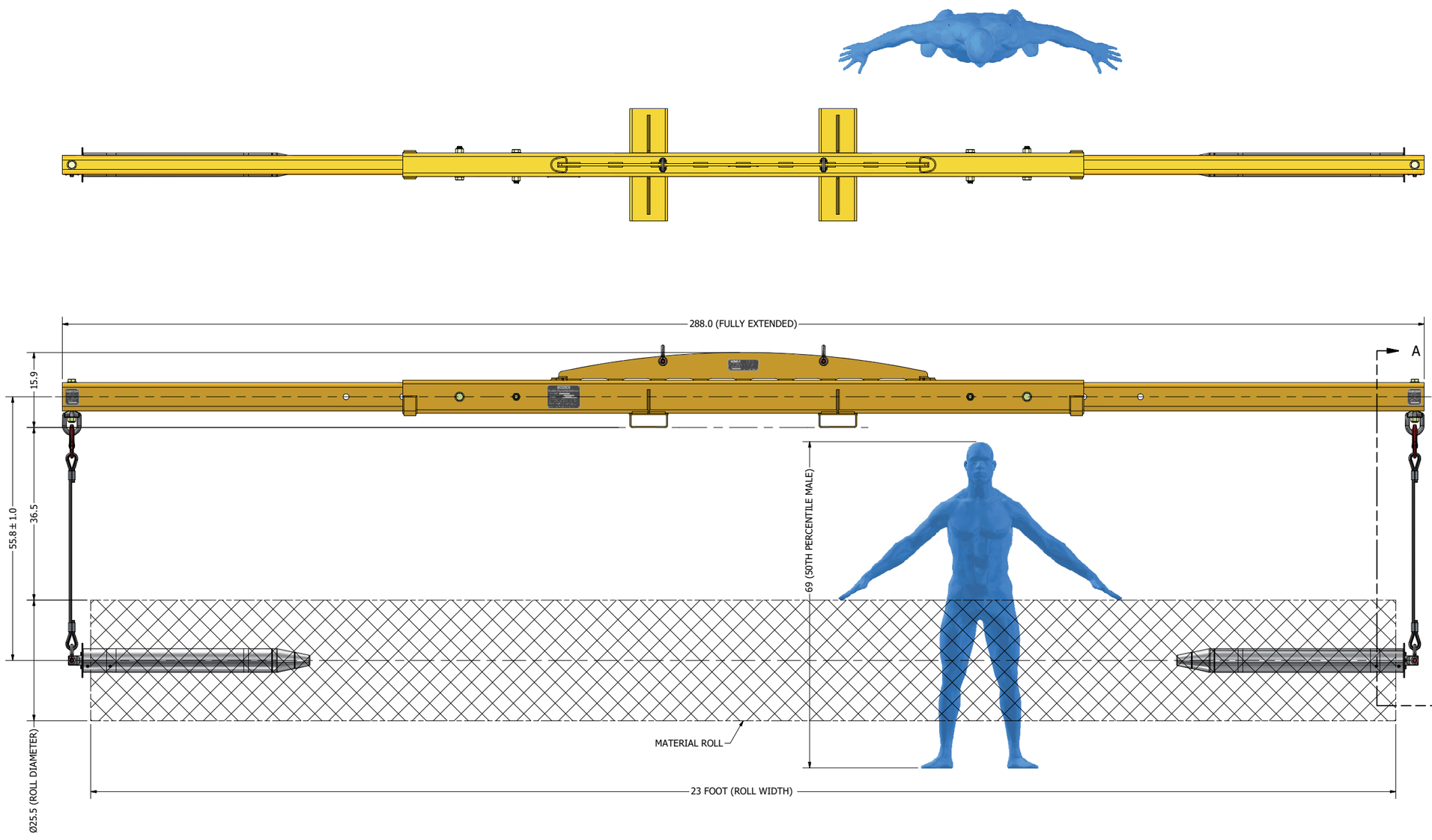

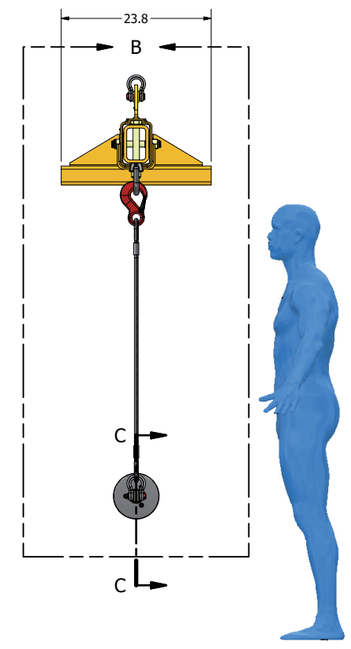

Return to Table of Contents

2. SPREADER BAR INCLUDES SB-72607 [1 ½" COMBINATION WRENCH] AND SB-72608 [1 7/16" COMBINATION WRENCH].

1. THE BALLOON SYMBOL, ⊖, CONTAINS THE REFERENCE NUMBER (REF NO) AND QUANTITY (QTY) OF A SPECIFIED COMPONENT IN THIS ASSY. THE UPPER DIGIT IS THE REF NO AND THE LOWER DIGIT IS THE QTY REQUIRED FOR THIS ASSY.

NOTES (UNLESS OTHERWISE SPECIFIED):

UNLESS OTHERWISE SPECIFIED DIMENSIONS ARE IN INCHES
INTERPRET DIMS AND TOLS PER ASME Y14.5-2009
STANDARD TOLERANCES

DECIMALS	SURFACE FINISH 63
XX ± .02	ANGLES ± 1°
XXX ± .005	FRACTIONS ± 1/16

MATERIAL: SEE PARTS LIST

FINISH: N/A

DO NOT SCALE DRAWING

DRAWN	ISD	08/27/2025
CHECKED		
QA		
MFG		
APPROVED		

DEMTECH Services, Inc.
Placerville, California

TITLE
[SB-0201/A] ASSY, LIFTING SPREADER BAR, LOAD TESTED & CERTIFIED COMPLETE W/LIFT CABLES & MISSILES

SIZE	DWG NO	REV
D	SB-0201/A	A

SCALE 1:12 SHEET 1 OF 3

PROPRIETARY DATA NOTICE
This document, prepared exclusively for DEMTECH Services, Inc., is the property of DEMTECH Services, Inc. and as such shall be surrendered to same upon request. This document contains confidential and proprietary information and the data disclosed herein or herewith is not to be reproduced, used, or disclosed in whole or in part to any third person or entity in any manner without prior written permission from DEMTECH Services, Inc..

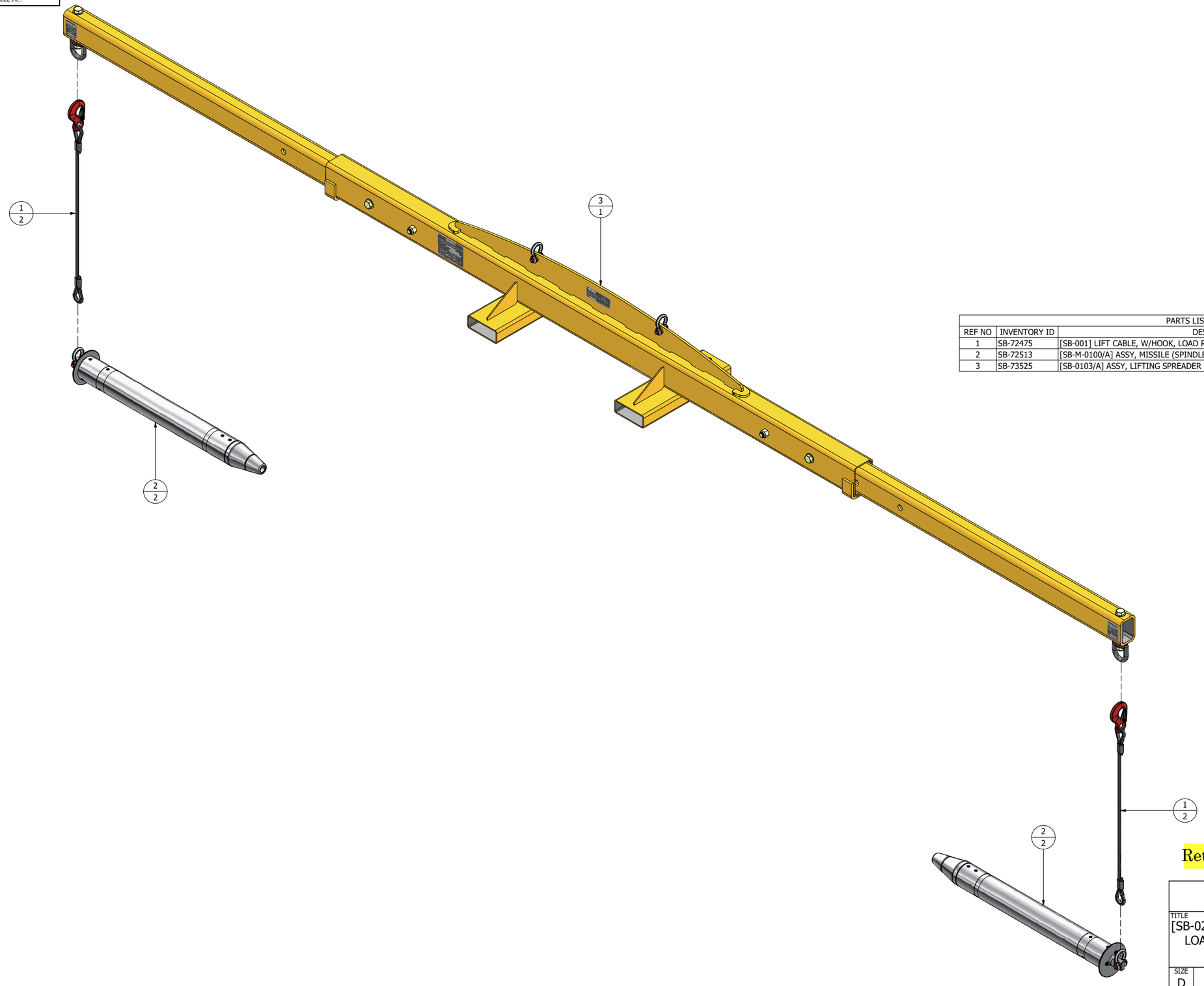

PARTS LIST			
REF NO	INVENTORY ID	DESCRIPTION	QTY
1	SB-72475	[SB-001] LIFT CABLE, W/HOOK, LOAD RATED, W/CERTIFICATE	2
2	SB-72513	[SB-M-0100/A] ASSY, MISSILE (SPINDLE), SPREADER BAR ROLL DEPLOYMENT SYSTEM	2
3	SB-73525	[SB-0103/A] ASSY, LIFTING SPREADER BAR FRAME	1

Return to Table of Contents

DEMTECH Services, Inc.
Placerville, California

TITLE
[SB-0201/A] ASSY, LIFTING SPREADER BAR, LOAD TESTED & CERTIFIED COMPLETE W/LIFT CABLES & MISSILES

SIZE	DWG NO	REV
D	SB-0201/A	A

SCALE 1:10 | SHEET 2 OF 3

PROPRIETARY DATA NOTICE
This document, prepared exclusively for DEMTECH Services, Inc., is the property of DEMTECH Services, Inc. and as such shall be surrendered to same upon request. This document contains confidential and proprietary information and the data disclosed herein or herewith is not to be reproduced, used, or disclosed in whole or in part to any third person or entity in any manner without prior written permission from DEMTECH Services, Inc..

DETAIL A
SCALE 1 / 4

DETAIL B
SCALE 1 / 4

SECTION C-C
SCALE 1 / 4

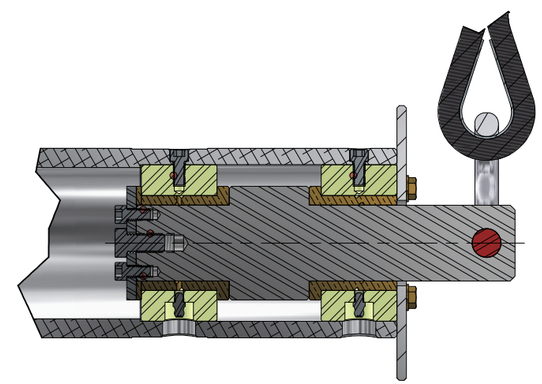

DETAIL D
SCALE 1 / 2

Return to Table of Contents

DEMTECH Services, Inc.
Placerville, California

TITLE
[SB-0201/A] ASSY, LIFTING SPREADER BAR, LOAD TESTED & CERTIFIED COMPLETE W/LIFT CABLES & MISSILES

SIZE	DWG NO	REV
D	SB-0201/A	A

SCALE 1:4 | SHEET 3 OF 3

PROPRIETARY DATA NOTICE
This document, prepared exclusively for DEMTECH Services, Inc., is the property of DEMTECH Services, Inc. and as such shall be surrendered to same upon request. This document contains confidential and proprietary information and the data disclosed herein or herewith is not to be reproduced, used, or disclosed in whole or in part to any third person or entity in any manner without prior written permission from DEMTECH Services, Inc..

DWG NO	SH	REV
SB-M-0100/A	1	D

REVISION HISTORY

ZONE	REV	DESCRIPTION	DATE	APPROVED
ALL	A	INITIAL RELEASE	10/01/2013	ISD
ALL	B	ADD 2X SB-M-012 SCREW, ADD THREADLOCKER	09/15/2017	ISD
ALL	C	ECO-21050, ADD SB-M-018 & SB-M-020	11/08/2021	ISD
ALL	D	ECO-25011,DEL SB-M-004-01, -02, ADD SB-M-020	06/24/2025	ISD

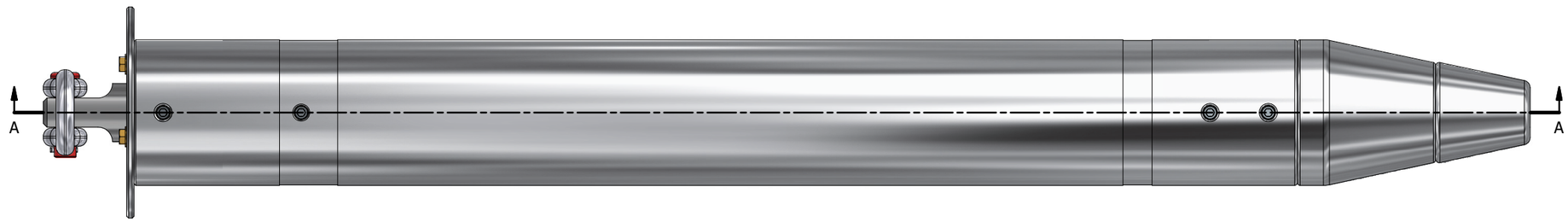

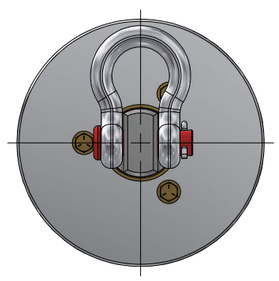

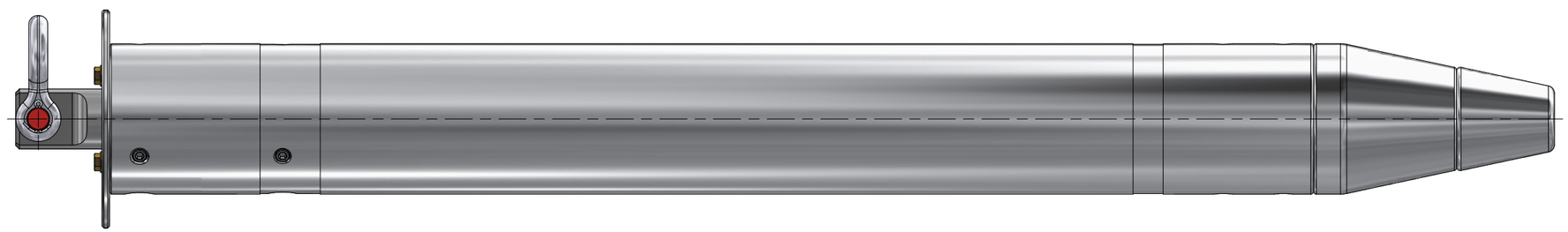

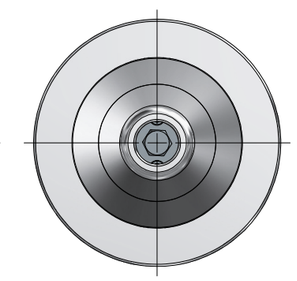

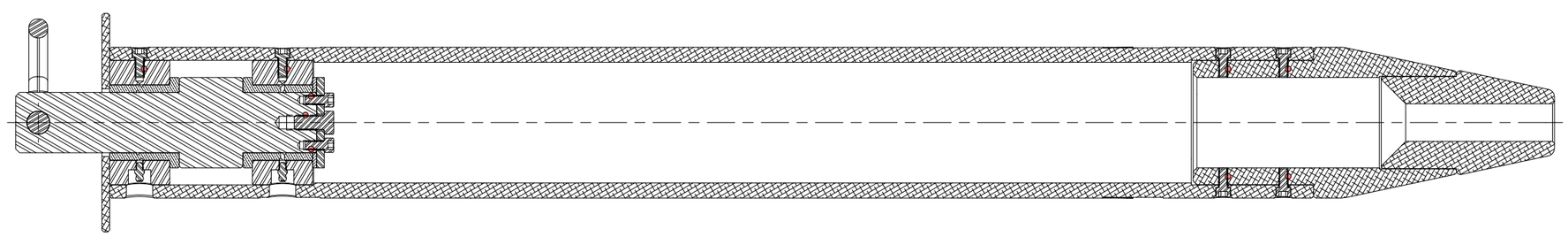

SECTION A-A

Return to Table of Contents

2. APPLY THREADLOCKER AS REQUIRED TO EACH FASTENER AS AND WHERE SHOWN.

1. THE BALLOON SYMBOL, ϴ, CONTAINS THE REFERENCE NUMBER (REF NO) AND QUANTITY (QTY) OF A SPECIFIED COMPONENT IN THIS ASSY. THE UPPER DIGIT IS THE REF NO AND THE LOWER DIGIT IS THE QTY REQUIRED FOR THIS ASSY.

NOTES (UNLESS OTHERWISE SPECIFIED):

UNLESS OTHERWISE SPECIFIED DIMENSIONS ARE IN INCHES
INTERPRET DIMS AND TOLS PER ASME Y14.5-2009
STANDARD TOLERANCES

DECIMALS	SURFACE FINISH 63
XX ± .02	ANGLES ± 1°
XXX ± .005	FRACTIONS ± 1/16

MATERIAL: SEE PARTS LIST

FINISH: N/A

DO NOT SCALE DRAWING

DRAWN	ISD	10/01/2013
CHECKED		
QA		
MFG		
APPROVED		

DEMTECH Services, Inc.
Placerville, California

TITLE: [SB-M-0100/A] ASSY, MISSILE (SPINDLE), SPREADER BAR ROLL DEPLOYMENT SYSTEM

SIZE	DWG NO	REV
D	SB-72513	D

SCALE 1:2 SHEET 1 OF 3

PROPRIETARY DATA NOTICE
This document, prepared exclusively for DEMTECH Services, Inc., is the property of DEMTECH Services, Inc. and as such shall be surrendered to same upon request. This document contains confidential and proprietary information and the data disclosed herein or herewith is not to be reproduced, used, or disclosed in whole or in part to any third person or entity in any manner without prior written permission from DEMTECH Services, Inc..

DWG NO	SH	REV
SB-M-0100/A	2	D

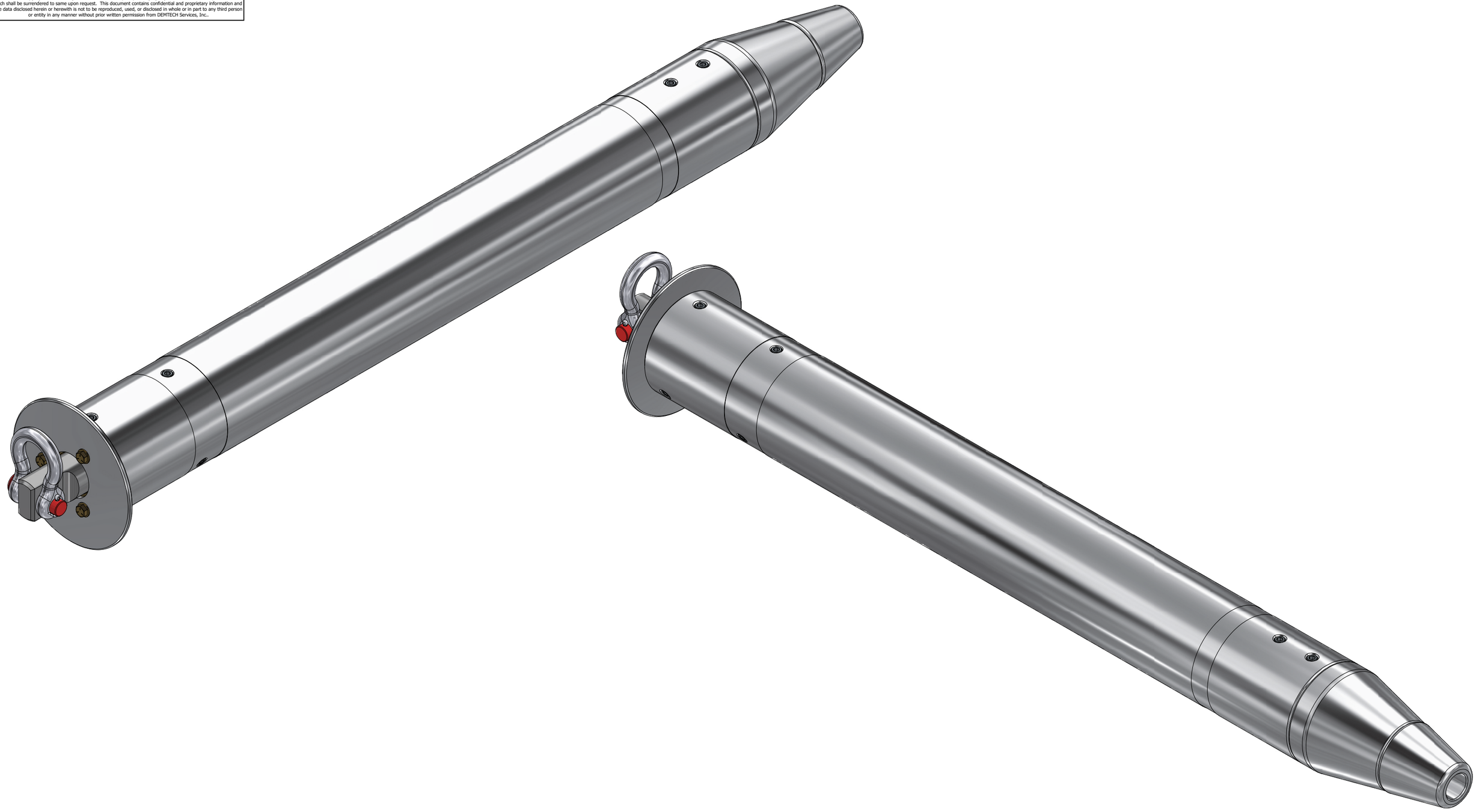

Return to Table of Contents

DEMTECH Services, Inc.
Placerville, California

TITLE
[SB-M-0100/A] ASSY, MISSILE (SPINDLE), SPREADER BAR ROLL DEPLOYMENT SYSTEM

SIZE	DWG NO	REV
D	SB-72513	D

SCALE 1:2 SHEET 2 OF 3

PROPRIETARY DATA NOTICE
This document, prepared exclusively for DEMTECH Services, Inc., is the property of DEMTECH Services, Inc. and as such shall be surrendered to same upon request. This document contains confidential and proprietary information and the data disclosed herein or herewith is not to be reproduced, used, or disclosed in whole or in part to any third person or entity in any manner without prior written permission from DEMTECH Services, Inc..

DWG NO	SH	REV
SB-M-0100/A	3	D

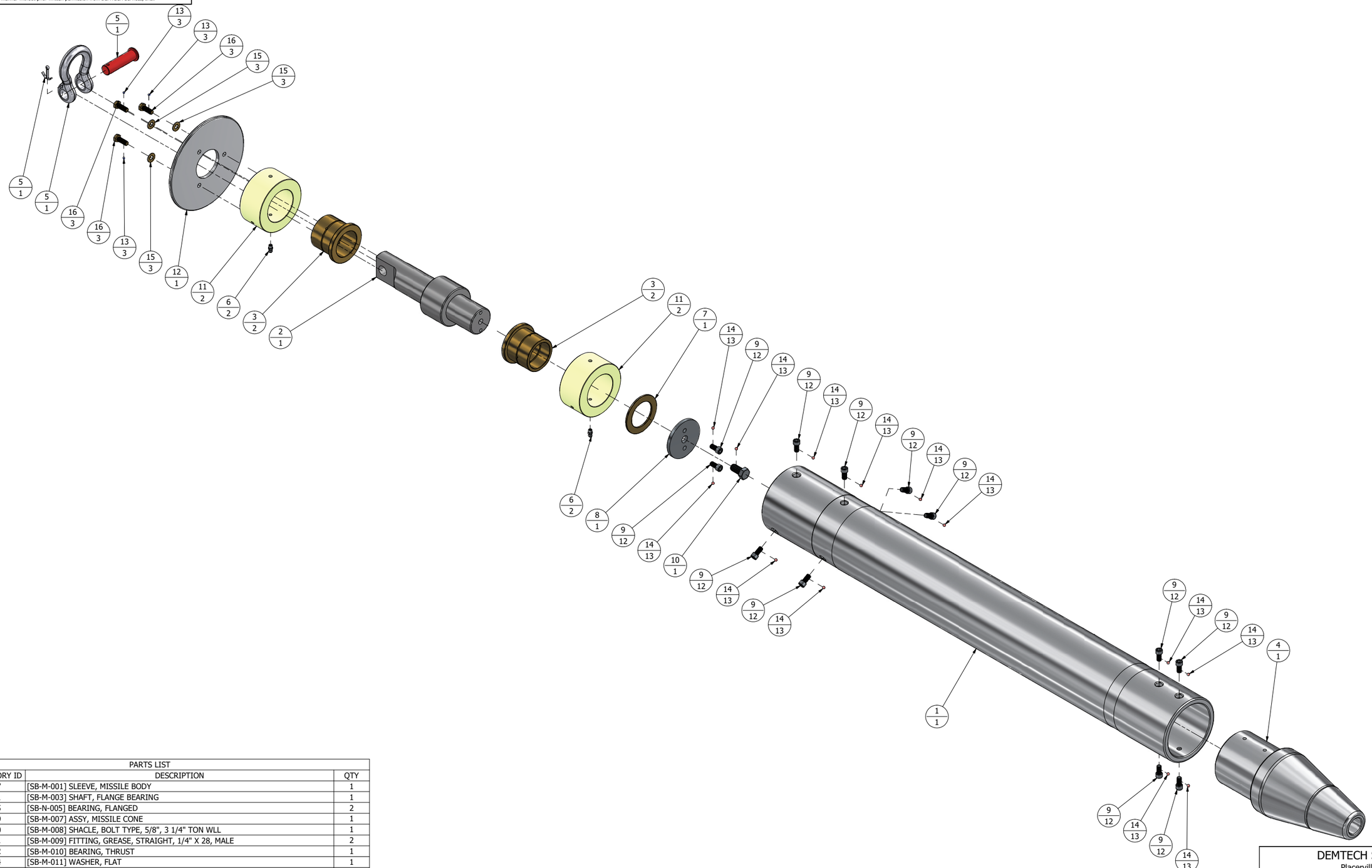

PARTS LIST

REF NO	INVENTORY ID	DESCRIPTION	QTY
1	SB-72497	[SB-M-001] SLEEVE, MISSILE BODY	1
2	SB-72501	[SB-M-003] SHAFT, FLANGE BEARING	1
3	SB-72505	[SB-N-005] BEARING, FLANGED	2
4	SB-72509	[SB-M-007] ASSY, MISSILE CONE	1
5	SB-72510	[SB-M-008] SHACLE, BOLT TYPE, 5/8", 3 1/4" TON WLL	1
6	SB-72511	[SB-M-009] FITTING, GREASE, STRAIGHT, 1/4" X 28, MALE	2
7	SB-72512	[SB-M-010] BEARING, THRUST	1
8	SB-72514	[SB-M-011] WASHER, FLAT	1
9	SB-72515	[SB-M-012] SCREW, CORROSION RESISTANT, 5/16-18 X 5/8" LONG	12
10	SB-72516	[SB-M-013] SCREW, GRADE 5, 1/2-13 X 1" LONG	1
11	SB-72622	[SB-M-020] COLLAR, FLANGE BEARING, W/ MOUNT HOLES	2
12	SB-73530	[SB-M-018] ATTACHMENT, ROLL STOP, SPREADER--BAR	1
13	HARDWARE	ADHESIVE, THREADLOCKING LIQUID, BLUE	3
14	HARDWARE	ADHESIVE, THREADLOCKING LIQUID, RED	13
15	HARDWARE	WASHER, ZINC-PLATED, 5/16" SCREW SIZE	3
16	HARDWARE	SCREW, 5/16"-8 X 7/8" LONG, HEX HEAD CAP, GRADE 5, ZINC CHROMATE ALLOY STEEL	3

Return to Table of Contents

DEMTECH Services, Inc.
Placerville, California

TITLE
[SB-M-0100/A] ASSY, MISSILE (SPINDLE), SPREADER BAR ROLL DEPLOYMENT SYSTEM

SIZE	DWG NO	REV
D	SB-72513	D

SCALE 1:3 SHEET 3 OF 3

PROPRIETARY DATA NOTICE
This document, prepared exclusively for DEMTECH Services, Inc., is the property of DEMTECH Services, Inc. and as such shall be surrendered to same upon request. This document contains confidential and proprietary information and the data disclosed herein or herewith is not to be reproduced, used, or disclosed in whole or in part to any third person or entity in any manner without prior written permission from DEMTECH Services, Inc..

DWG NO	SH	REV
SB-0202_A	1	A

REVISION HISTORY

ZONE	REV	DESCRIPTION	DATE	APPROVED
ALL	A	ECO-25018, INITIAL RELEASE TO PRODUCTION	08/27/2025	FRK

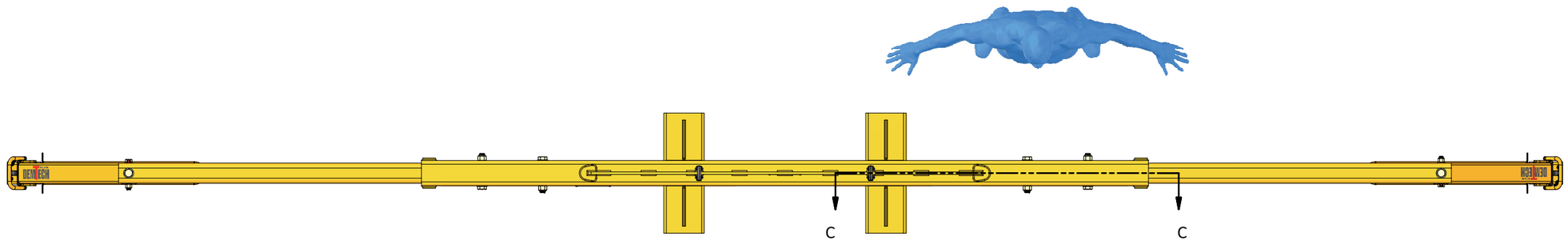

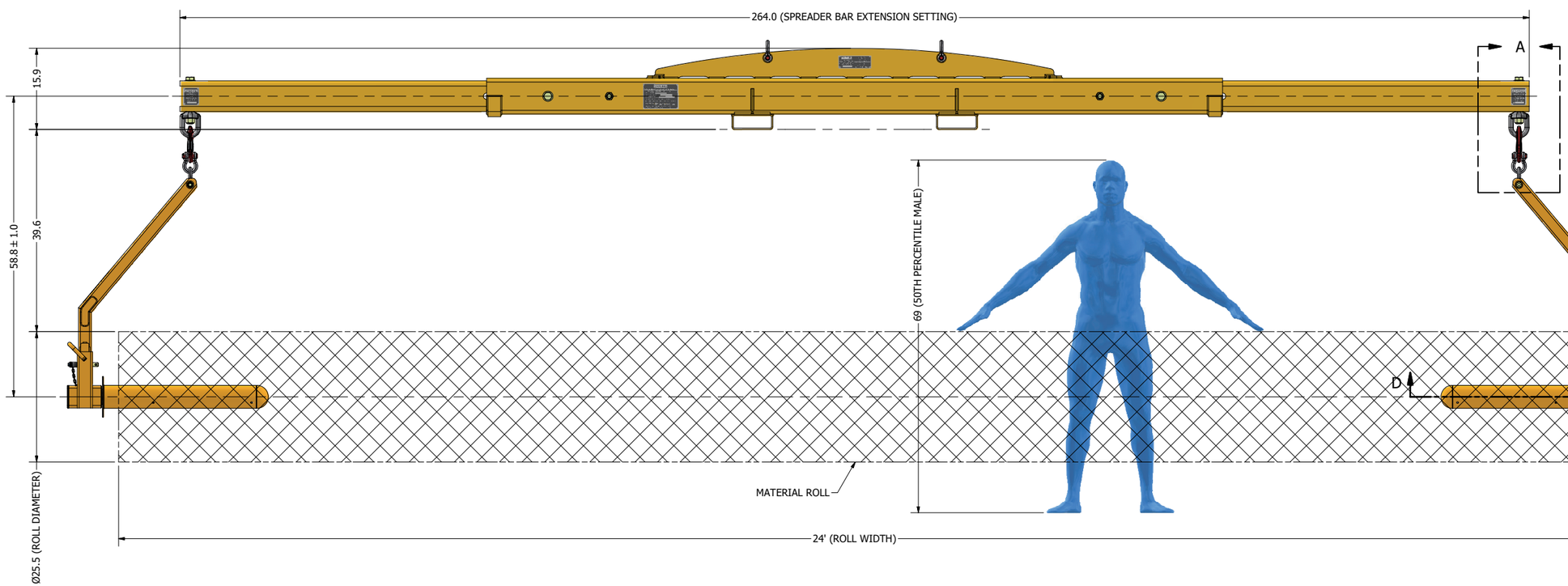

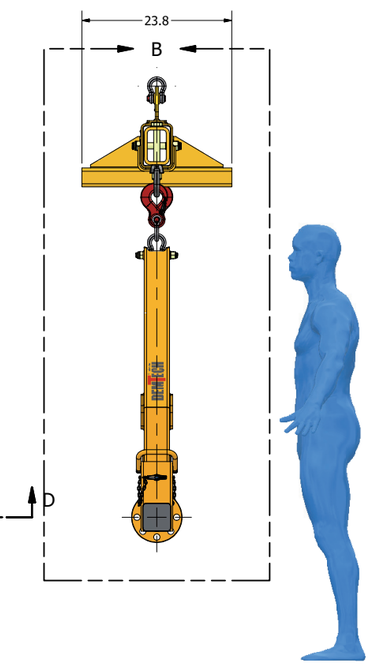

Return to Table of Contents

2. SPREADER BAR INCLUDES SB-72607 [1 ½" COMBINATION WRENCH] AND SB-72608 [1 7⁄16" COMBINATION WRENCH]

1. THE BALLOON SYMBOL, ϴ, CONTAINS THE REFERENCE NUMBER (REF NO) AND QUANTITY (QTY) OF A SPECIFIED COMPONENT IN THIS ASSY. THE UPPER DIGIT IS THE REF NO AND THE LOWER DIGIT IS THE QTY REQUIRED FOR THIS ASSY.

NOTES (UNLESS OTHERWISE SPECIFIED):

UNLESS OTHERWISE SPECIFIED DIMENSIONS ARE IN INCHES
INTERPRET DIMS AND TOLS PER ASME Y14.5-2009
STANDARD TOLERANCES

DECIMALS	SURFACE FINISH 63√
XX ± .02	ANGLES ± 1°
XXX ± .005	FRACTIONS ± 1/16

MATERIAL: SEE PARTS LIST

FINISH: N/A

DO NOT SCALE DRAWING

DRAWN	ODM	08/27/2025
CHECKED		
QA		
MFG		
APPROVED		

DEMTECH Services, Inc.
Placerville, California

TITLE: [SB-0202/A] ASSY, LIFTING SPREADER BAR, W/ Z-BAR SPINDLES, COMPLETE

SIZE	DWG NO	REV
D	SB-73529	A

SCALE 1:12 — SHEET 1 OF 3

PROPRIETARY DATA NOTICE
This document, prepared exclusively for DEMTECH Services, Inc., is the property of DEMTECH Services, Inc. and as such shall be surrendered to same upon request. This document contains confidential and proprietary information and the data disclosed herein or herewith is not to be reproduced, used, or disclosed in whole or in part to any third person or entity in any manner without prior written permission from DEMTECH Services, Inc..

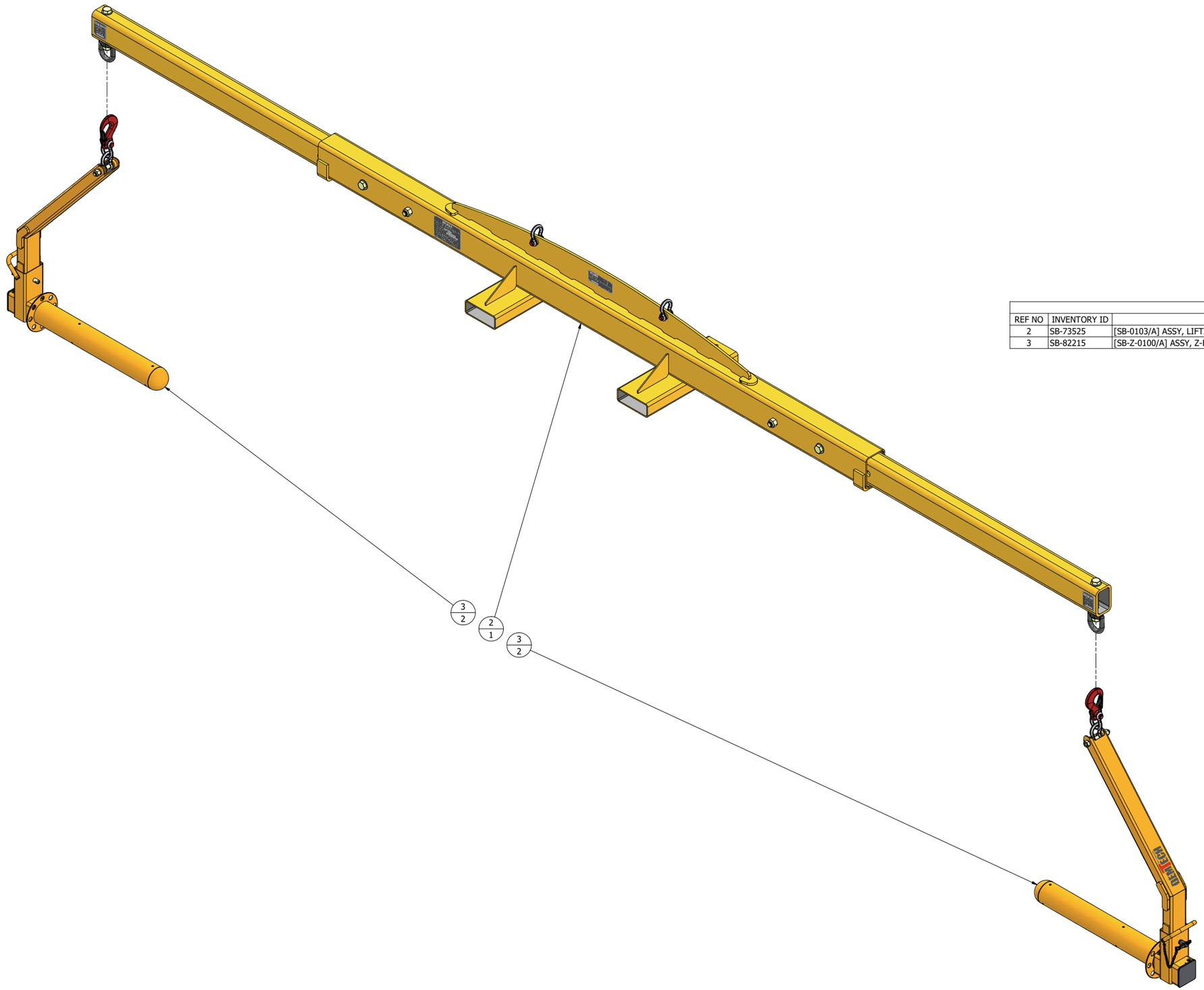

PARTS LIST			
REF NO	INVENTORY ID	DESCRIPTION	QTY
2	SB-73525	[SB-0103/A] ASSY, LIFTING SPREADER BAR FRAME	1
3	SB-82215	[SB-Z-0100/A] ASSY, Z-BAR ROLL DEPLOYMENT SPINDLE (COMPLETE UNIT)	2

Return to Table of Contents

DEMTECH Services, Inc.
Placerville, California

TITLE
[SB-0202/A] ASSY, LIFTING SPREADER BAR, W/ Z-BAR SPINDLES, COMPLETE

SIZE	DWG NO	REV
D	SB-73529	A

SCALE 1:10 | SHEET 2 OF 3

PROPRIETARY DATA NOTICE
This document, prepared exclusively for DEMTECH Services, Inc., is the property of DEMTECH Services, Inc. and as such shall be surrendered to same upon request. This document contains confidential and proprietary information and the data disclosed herein or herewith is not to be reproduced, used, or disclosed in whole or in part to any third person or entity in any manner without prior written permission from DEMTECH Services, Inc..

DWG NO	SH	REV
SB-0202_A	3	A

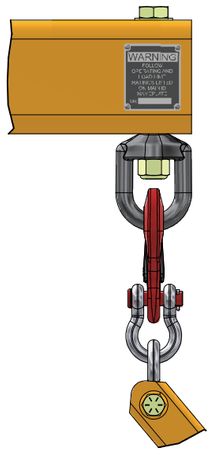

DETAIL A
SCALE 1:4

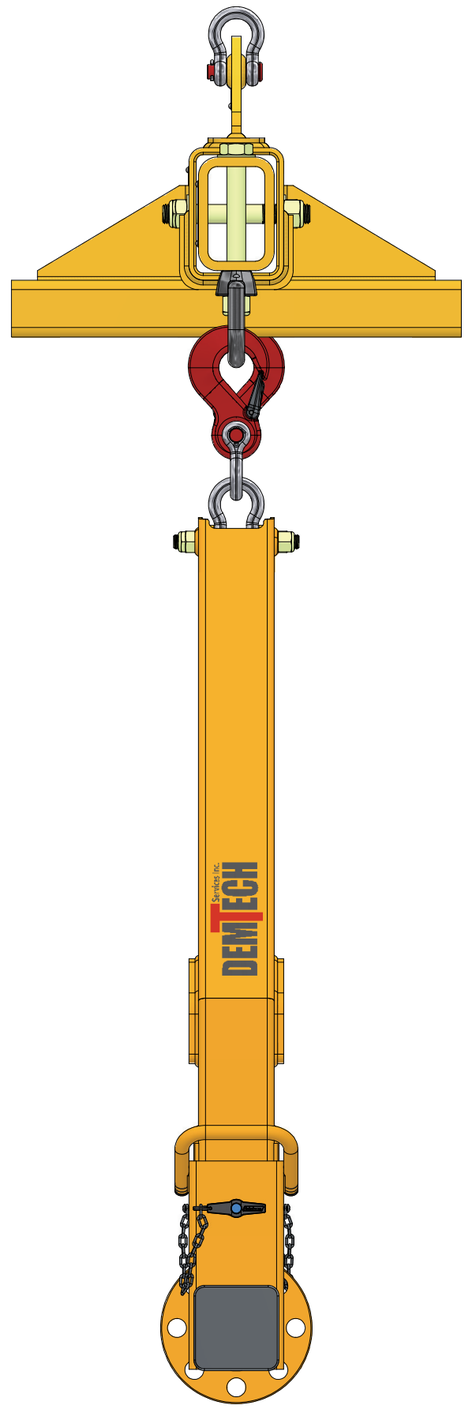

DETAIL B
SCALE 1:4

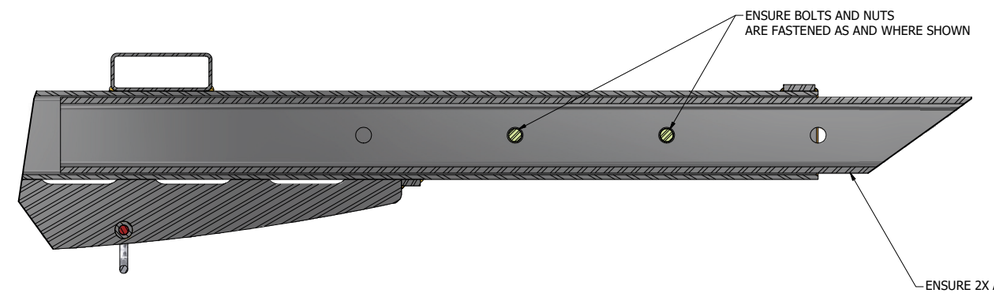

SECTION C-C
SCALE 1:6

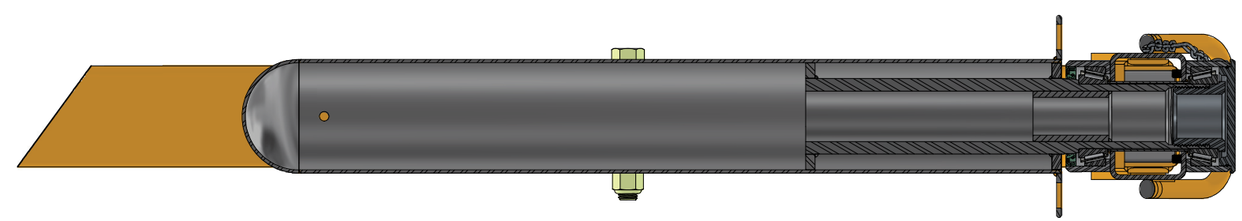

SECTION D-D
SCALE 1:3

Return to Table of Contents

DEMTECH Services, Inc.
Placerville, California

TITLE
[SB-0202/A] ASSY, LIFTING SPREADER BAR, W/ Z-BAR SPINDLES, COMPLETE

SIZE	DWG NO	REV
D	SB-73529	A

SCALE 1:4 | SHEET 3 OF 3

PROPRIETARY DATA NOTICE
This document, prepared exclusively for DEMTECH Services, Inc., is the property of DEMTECH Services, Inc. and as such shall be surrendered to same upon request. This document contains confidential and proprietary information and the data disclosed herein or herewith is not to be reproduced, used, or disclosed in whole or in part to any third person or entity in any manner without prior written permission from DEMTECH Services, Inc..

DWG NO	SH	REV
SB-Z-0100/A	1	B

REVISION HISTORY

ZONE	REV	DESCRIPTION	DATE	APPROVED
ALL	01	INITIAL PROTOTYPE RELEASE	06/08/2022	ISD
ALL	02	REFLECT CHANGES TO SB-Z-0101/A	09/30/2022	ISD
ALL	A	ECO-23002, REFLECT VARIOUS COMPONENT CHANGES, INITIAL RELEASE TO PRODUCTION	01/10/2023	ISD
ALL	B	ECO-23017, REFLECT VARIOUS COMPONENT CHANGES	04/03/2023	ISD

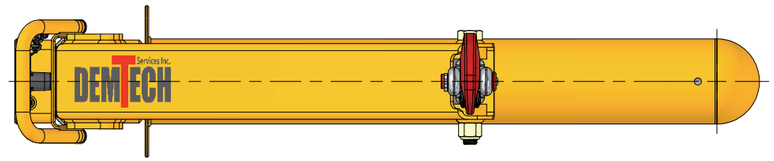

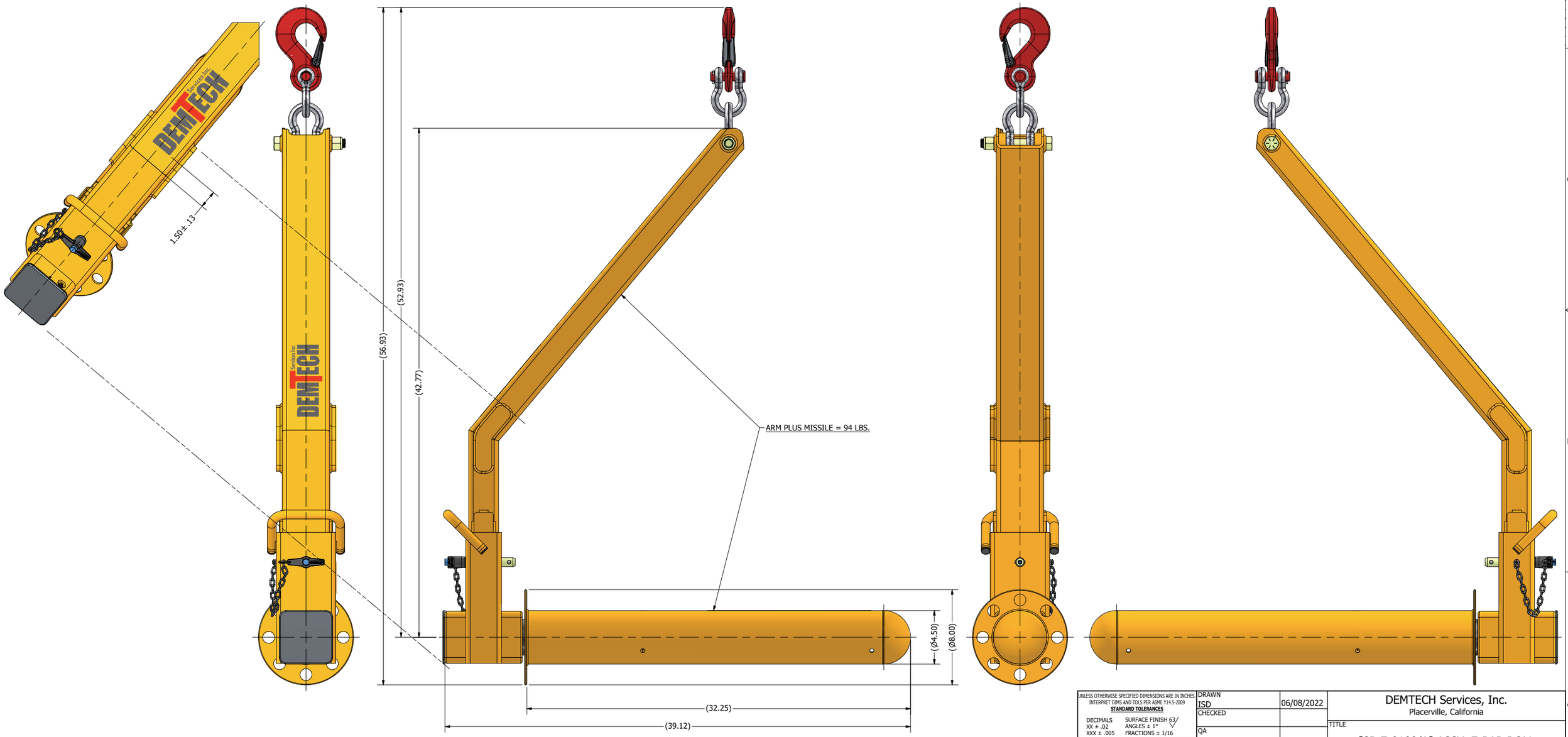

1. THE BALLOON SYMBOL, ϴ, CONTAINS THE REFERENCE NUMBER (REF NO) AND QUANTITY (QTY) OF A SPECIFIED COMPONENT IN THIS ASSY. THE UPPER DIGIT IS THE REF NO AND THE LOWER DIGIT IS THE QTY REQUIRED FOR THIS ASSY.

NOTES (UNLESS OTHERWISE SPECIFIED):

Return to Table of Contents

UNLESS OTHERWISE SPECIFIED DIMENSIONS ARE IN INCHES
INTERPRET DIMS AND TOLS PER ASME Y14.5-2009
STANDARD TOLERANCES
DECIMALS XX ± .02 XXX ± .005
SURFACE FINISH 63
ANGLES ± 1°
FRACTIONS ± 1/16

MATERIAL: SEE NOTES AND PART LIST

FINISH: N/A

DO NOT SCALE DRAWING

DRAWN	ISD	06/08/2022
CHECKED		
QA		
MFG		
APPROVED		

DEMTECH Services, Inc.
Placerville, California

TITLE: [SB-Z-0100/A] ASSY, Z-BAR ROLL DEPLOYMENT SPINDLE (COMPLETE UNIT)

SIZE	DWG NO	REV
D	SB-Z-0100/A	B

SCALE 1:4 SHEET 1 OF 4

PROPRIETARY DATA NOTICE
This document, prepared exclusively for DEMTECH Services, Inc., is the property of DEMTECH Services, Inc. and as such shall be surrendered to same upon request. This document contains confidential and proprietary information and the data disclosed herein or herewith is not to be reproduced, used, or disclosed in whole or in part to any third person or entity in any manner without prior written permission from DEMTECH Services, Inc..

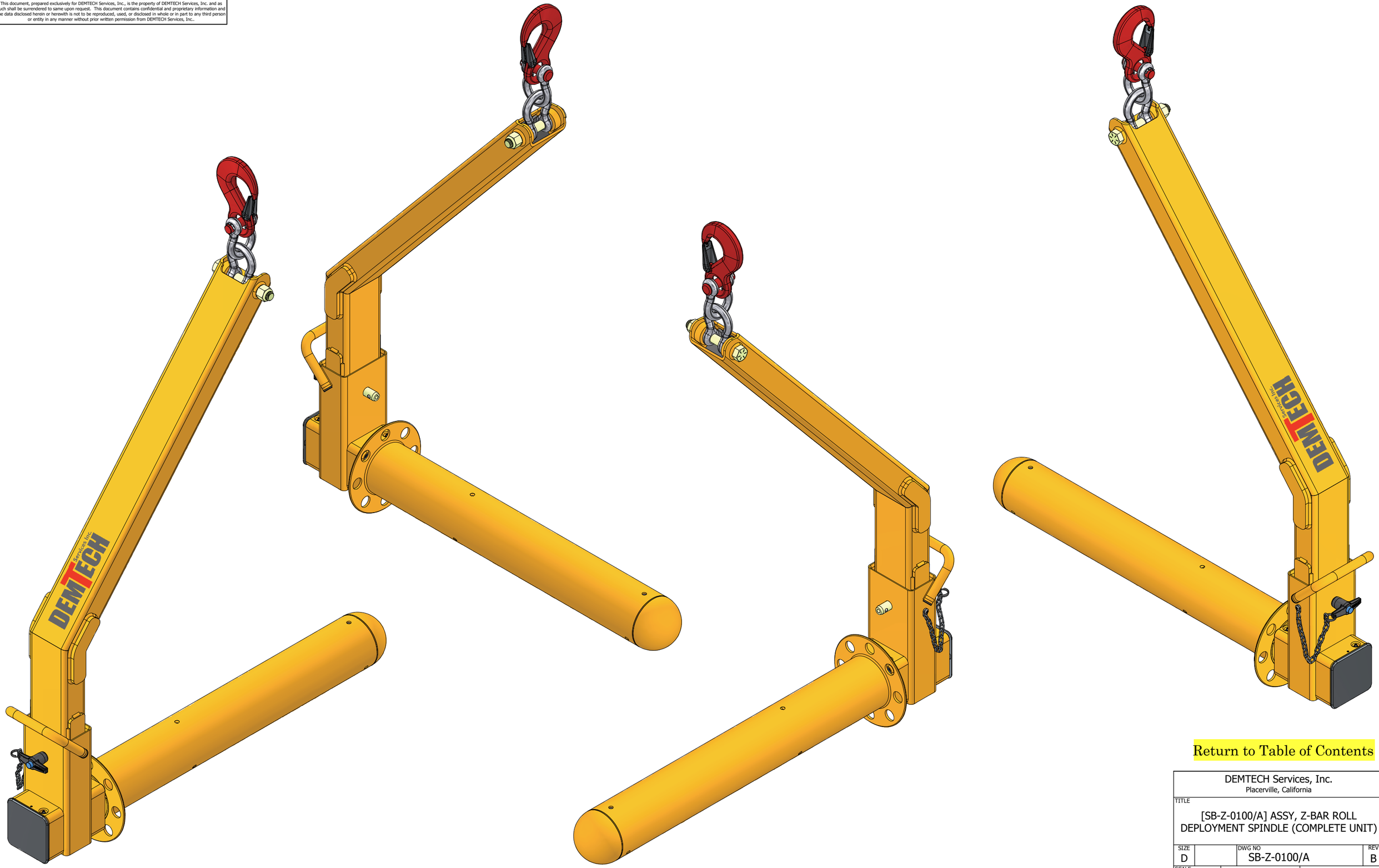

Return to Table of Contents

DEMTECH Services, Inc.
Placerville, California

TITLE
[SB-Z-0100/A] ASSY, Z-BAR ROLL DEPLOYMENT SPINDLE (COMPLETE UNIT)

SIZE	DWG NO	REV
D	SB-Z-0100/A	B

SCALE 1:3 | SHEET 2 OF 4

PROPRIETARY DATA NOTICE
This document, prepared exclusively for DEMTECH Services, Inc., is the property of DEMTECH Services, Inc. and as such shall be surrendered to same upon request. This document contains confidential and proprietary information and the data disclosed herein or herewith is not to be reproduced, used, or disclosed in whole or in part to any third person or entity in any manner without prior written permission from DEMTECH Services, Inc..

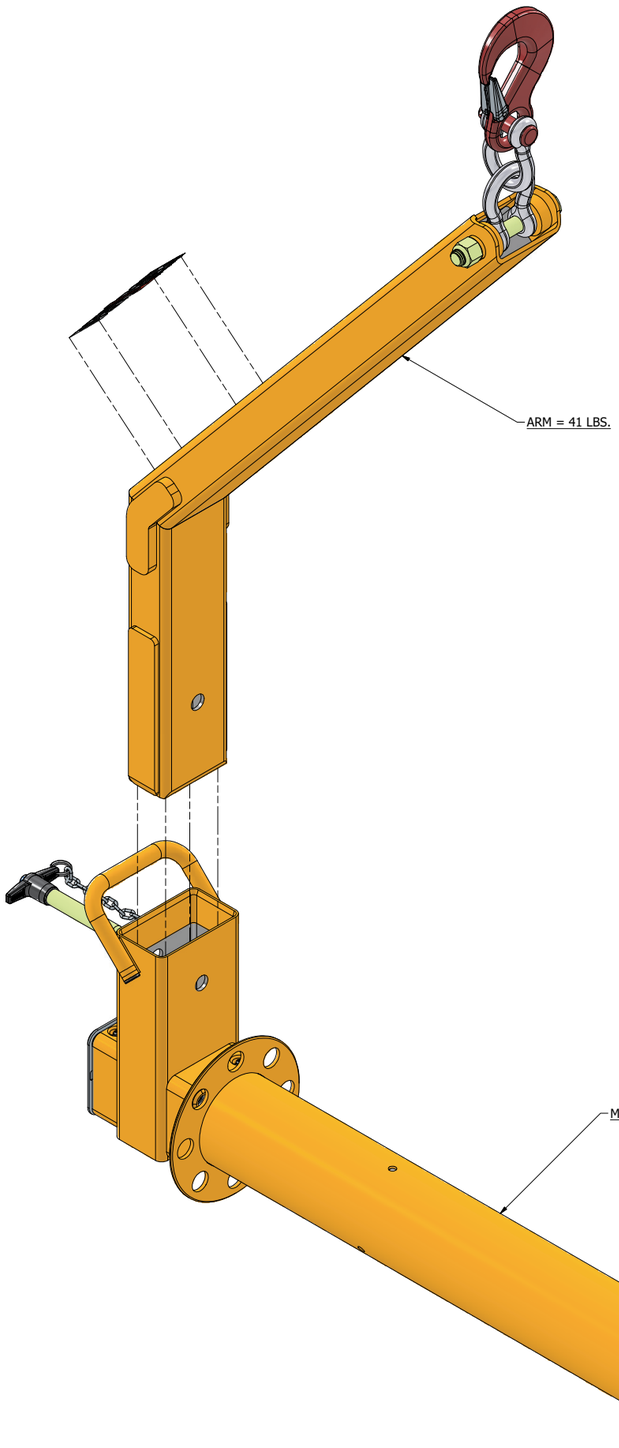

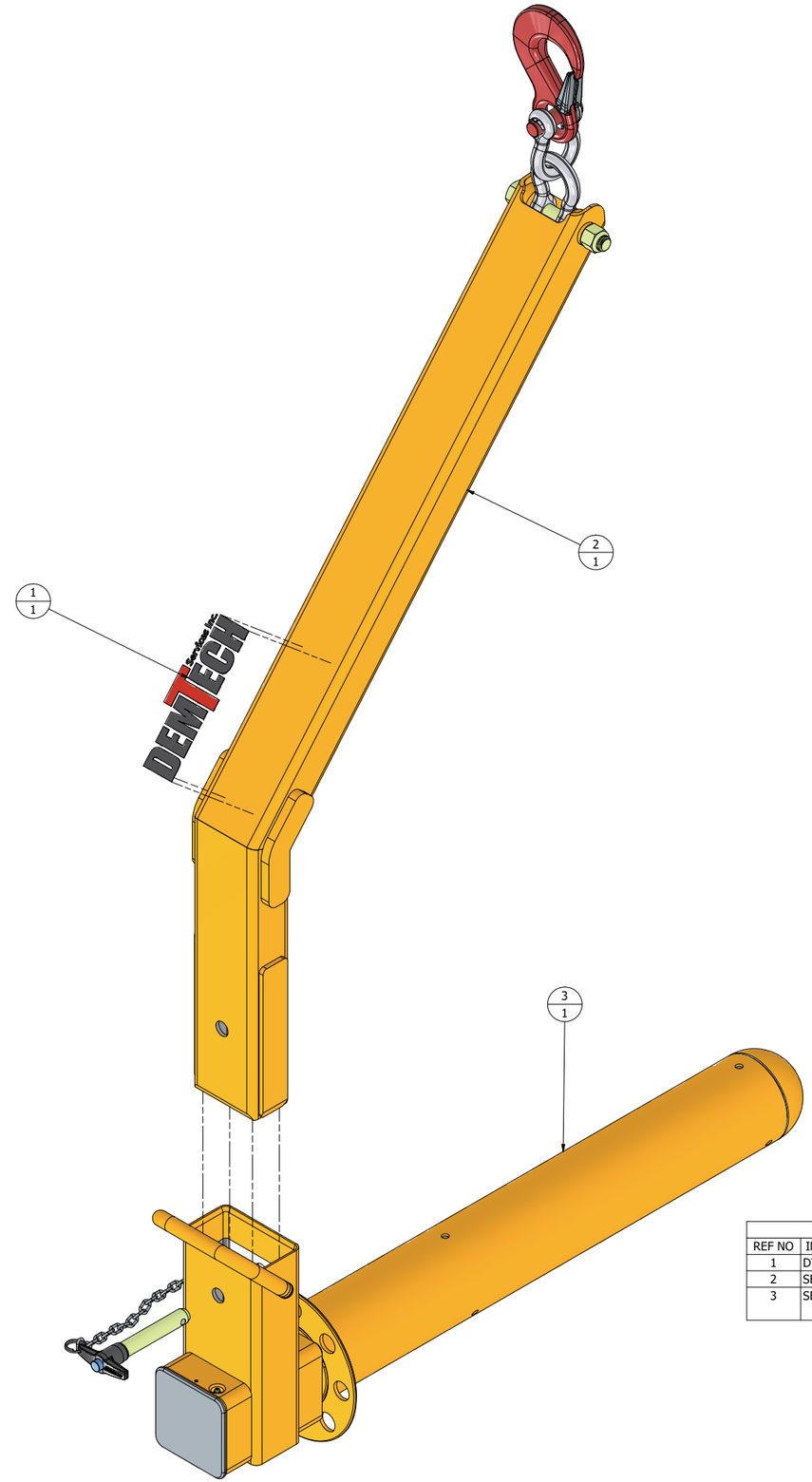

Return to Table of Contents

PARTS LIST

REF NO	INVENTORY ID	DESCRIPTION	QTY
1	DT-72336	[LABEL-DEMTECH] LABEL-DEMTECH LOGO, BLACK W/RED "T"	1
2	SB-82200	[SB-Z-0101/A] ASSY, ARM, Z-BAR (UPPER ARM ASSY ONLY)	1
3	SB-82205	[SB-Z-0102/A] ASSY, LOWER SPINDLE SYSTEM, Z-BAR (SPINDLE & BEARING ASSY COMPLETE)	1

DEMTECH Services, Inc.
Placerville, California

TITLE
[SB-Z-0100/A] ASSY, Z-BAR ROLL DEPLOYMENT SPINDLE (COMPLETE UNIT)

SIZE	DWG NO	REV
D	SB-82215	B

SCALE 1:3 | SHEET 3 OF 4

PROPRIETARY DATA NOTICE
This document, prepared exclusively for DEMTECH Services, Inc., is the property of DEMTECH Services, Inc. and as such shall be surrendered to same upon request. This document contains confidential and proprietary information and the data disclosed herein or herewith is not to be reproduced, used, or disclosed in whole or in part to any third person or entity in any manner without prior written permission from DEMTECH Services, Inc..

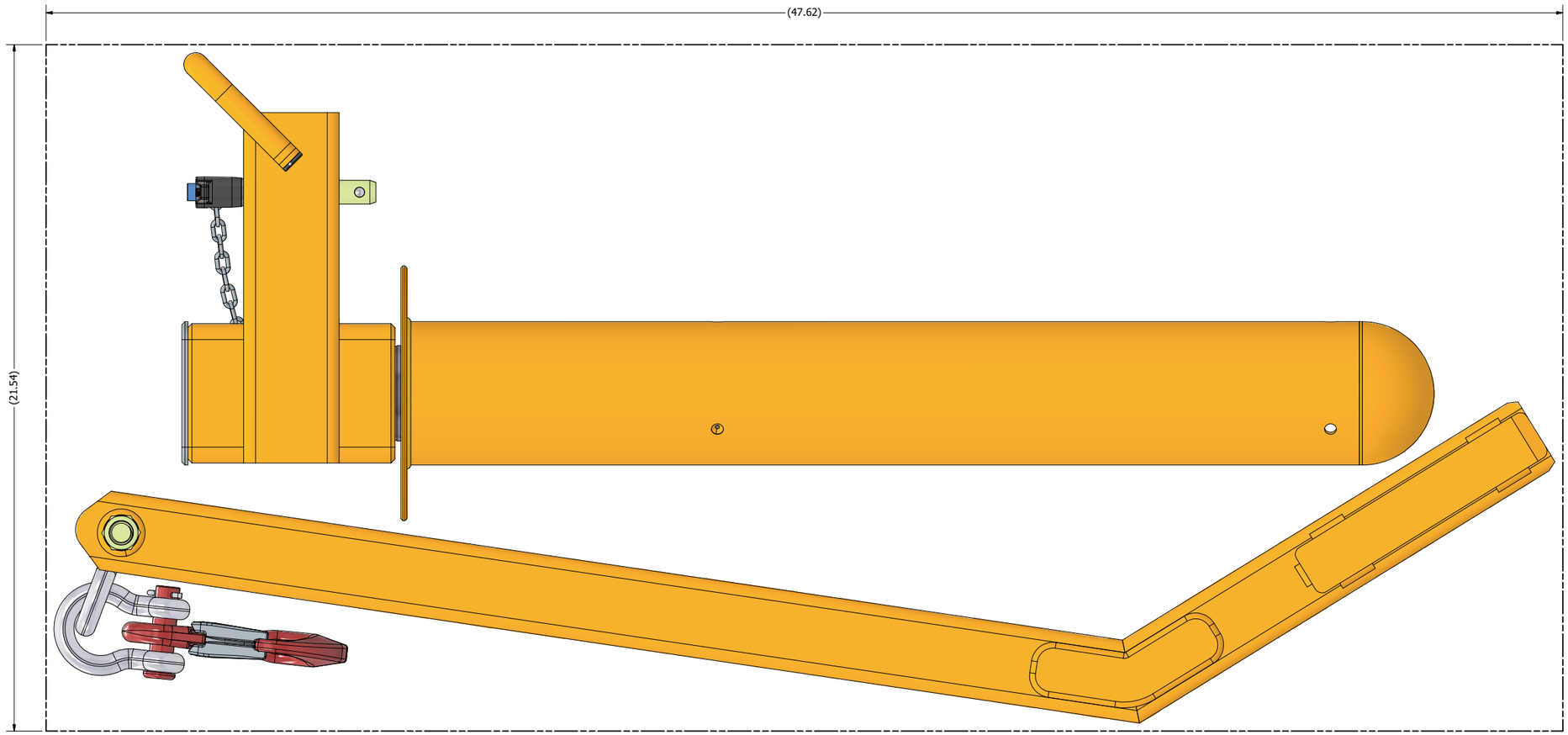

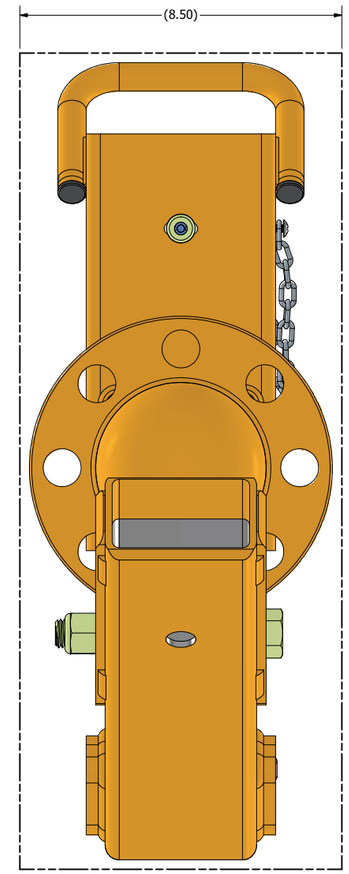

PACK AND SHIP ORIENTATION

Return to Table of Contents

DEMTECH Services, Inc.
Placerville, California

TITLE
[SB-Z-0100/A] ASSY, Z-BAR ROLL DEPLOYMENT SPINDLE (COMPLETE UNIT)

SIZE	DWG NO	REV
D	SB-82215	B

SCALE 1:2 | SHEET 4 OF 4

PROPRIETARY DATA NOTICE
This document, prepared exclusively for DEMTECH Services, Inc., is the property of DEMTECH Services, Inc. and as such shall be surrendered to same upon request. This document contains confidential and proprietary information and the data disclosed herein or herewith is not to be reproduced, used, or disclosed in whole or in part to any third person or entity in any manner without prior written permission from DEMTECH Services, Inc..

DWG NO	SH	REV
SB-Z-0101/A	1	A

REVISION HISTORY

ZONE	REV	DESCRIPTION	DATE	APPROVED
ALL	01	INITIAL PROTOTYPE RELEASE	06/08/2022	ISD
ALL	02	REFLECT CHANGES TO SB-Z-001, BOLT WAS 6-1/2" LONG	09/30/2022	ISD
ALL	A	ECO-23002, REFLECT CHANGES TO SB-Z-001, INITIAL RELEASE TO PRODUCTION	01/10/2023	ISD

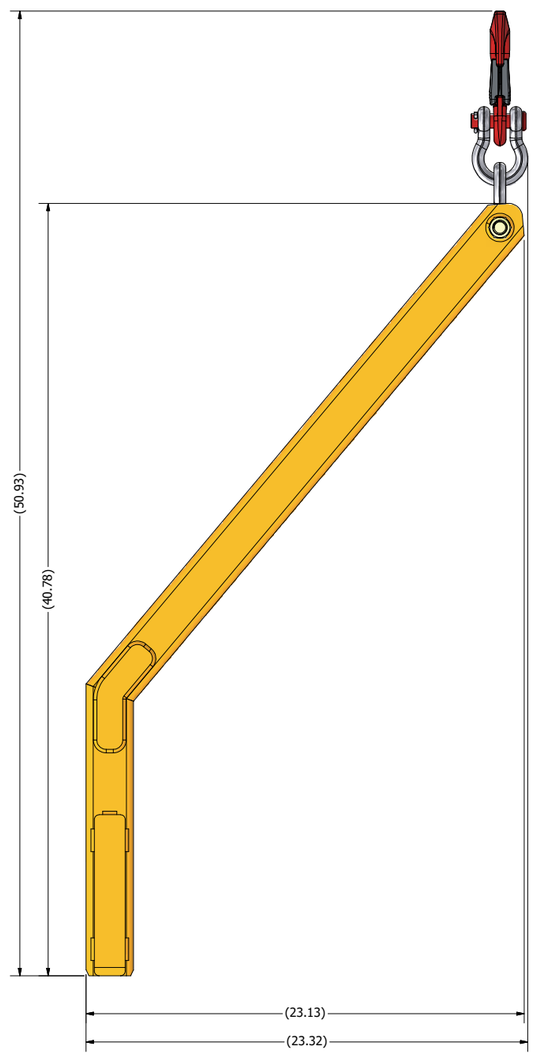

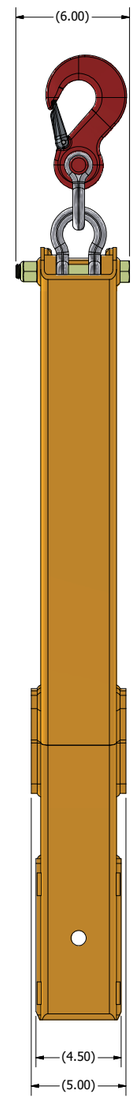

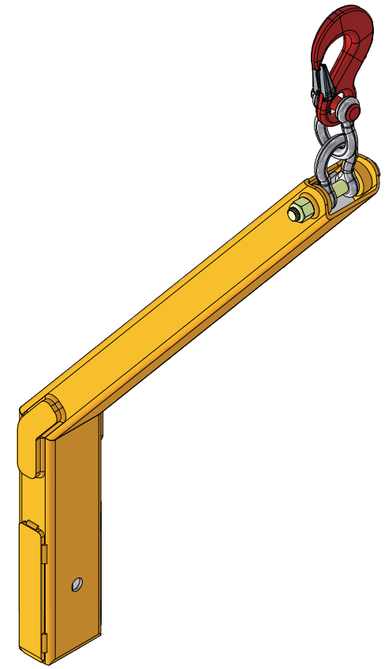

1. THE BALLOON SYMBOL, Θ, CONTAINS THE REFERENCE NUMBER (REF NO) AND QUANTITY (QTY) OF A SPECIFIED COMPONENT IN THIS ASSY. THE UPPER DIGIT IS THE REF NO AND THE LOWER DIGIT IS THE QTY REQUIRED FOR THIS ASSY.

NOTES (UNLESS OTHERWISE SPECIFIED):

Return to Table of Contents

UNLESS OTHERWISE SPECIFIED DIMENSIONS ARE IN INCHES
INTERPRET DIMS AND TOLS PER ASME Y14.5-2009
STANDARD TOLERANCES
DECIMALS XX ± .02 XXX ± .005
SURFACE FINISH 63
ANGLES ± 1°
FRACTIONS ± 1/16

MATERIAL: SEE NOTES AND PARTS LIST

FINISH: N/A

DO NOT SCALE DRAWING

DRAWN ISD	06/08/2022	
CHECKED		
QA		
MFG		
APPROVED		

DEMTECH Services, Inc.
Placerville, California

TITLE: [SB-Z-0101/A] ASSY, ARM, Z-BAR (UPPER ARM ASSY ONLY)

SIZE	DWG NO	REV
D	SB-82200	A

SCALE 1:4 SHEET 1 OF 2

PROPRIETARY DATA NOTICE
This document, prepared exclusively for DEMTECH Services, Inc., is the property of DEMTECH Services, Inc. and as such shall be surrendered to same upon request. This document contains confidential and proprietary information and the data disclosed herein or herewith is not to be reproduced, used, or disclosed in whole or in part to any third person or entity in any manner without prior written permission from DEMTECH Services, Inc..

DWG NO	SH	REV
SB-Z-0101/A	2	A

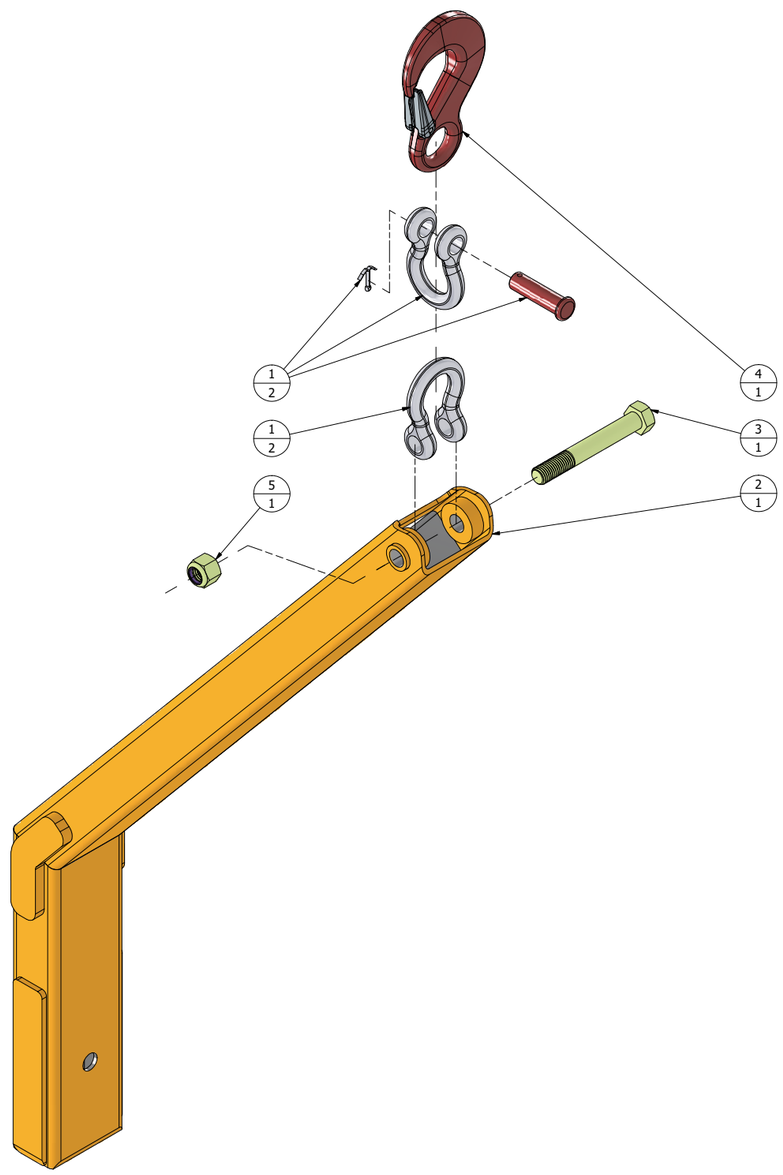

Return to Table of Contents

PARTS LIST

REF NO	INVENTORY ID	DESCRIPTION	QTY
1	SB-72510	[SB-M-008] SHACLE, BOLT TYPE, 5/8", 3 1/4" TON WLL	2
2	SB-82170	[SB-Z-001] ARM, UPPER WELDMENT, Z-BAR	1
3	SB-82190	[SB-Z-012] BOLT, 3/4"-10 X 5-1/2" LONG, HEX HEAD, GRADE 8, ZINC PLATED ALLOY STEEL	1
4	SB-82195	[SB-Z-008] EYE HOOK, FORGED ALLOY, ID CODE H, 3 TON WORKING LOAD LIMIT, W/ LATCH (CROSBY 1022413)	1
5	HARDWARE	NUT, 3/4"-10, HEX NYLON-INSERT LOCKING, GRADE 8, ZINC PLATED ALLOY STEEL	1

DEMTECH Services, Inc.
Placerville, California

TITLE
[SB-Z-0101/A] ASSY, ARM, Z-BAR (UPPER ARM ASSY ONLY)

SIZE	DWG NO	REV
D	SB-82200	A

SCALE 1:3 SHEET 2 OF 2

PROPRIETARY DATA NOTICE
This document, prepared exclusively for DEMTECH Services, Inc., is the property of DEMTECH Services, Inc. and as such shall be surrendered to same upon request. This document contains confidential and proprietary information and the data disclosed herein or herewith is not to be reproduced, used, or disclosed in whole or in part to any third person or entity in any manner without prior written permission from DEMTECH Services, Inc..

DWG NO	SH	REV
SB-Z-0102/A	1	C

REVISION HISTORY

ZONE	REV	DESCRIPTION	DATE	APPROVED
ALL	01	INITIAL PROTOTYPE RELEASE	06/08/2022	ISD
ALL	A	ECO-23002, REFLECT VARIOUS COMPONENT CHANGES, INITIAL RELEASE TO PRODUCTION	01/10/2023	ISD
ALL	B	ECO-23017, REFLECT VARIOUS COMPONENT CHANGES	04/03/2023	ISD
ALL	C	ECO-23033, ADD SB-Z-016 ASSY NOTES AND DIM	12/13/2024	ISD

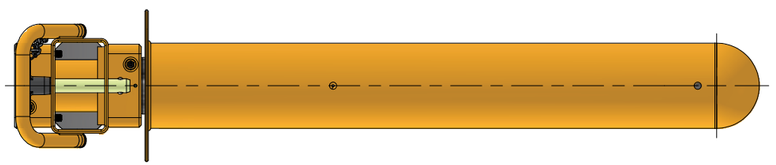

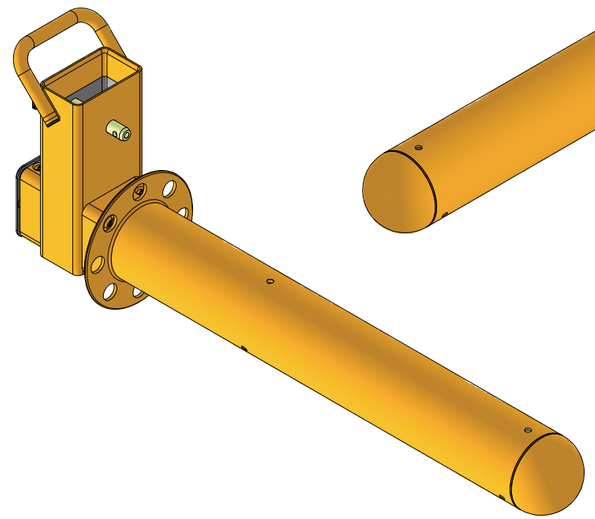

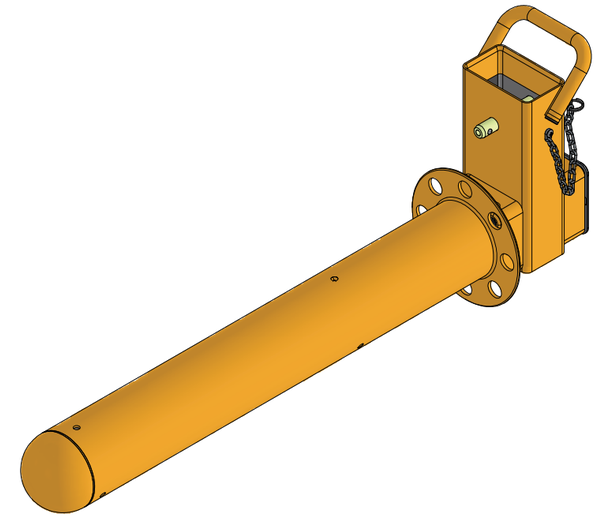

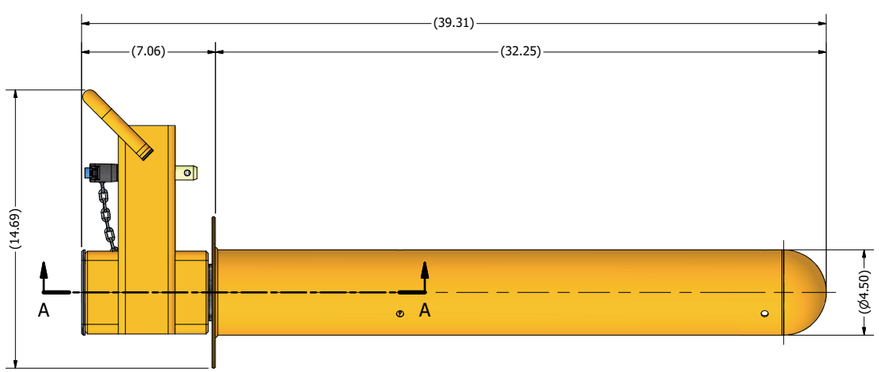

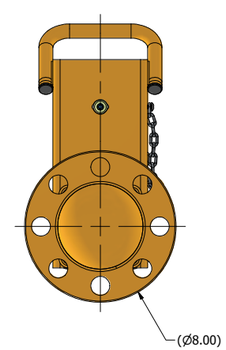

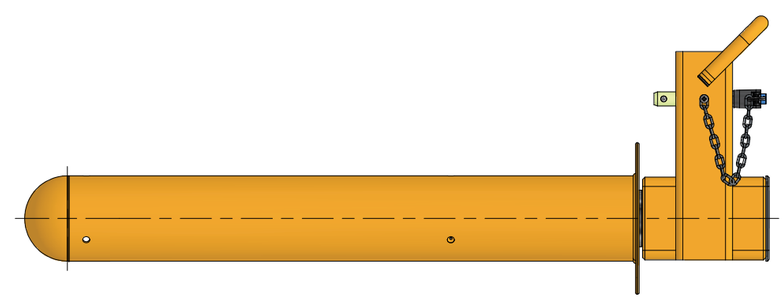

Return to Table of Contents

3. AFTER FULL ASSEMBLY ADD APPROXIMATELY 62 TO 68 CUBIC CENTIMETERS (3.78 TO 4.15 CUBIC INCHES) ALL-PURPOSE AND WEATHER BEARING GREASE TO EACH GREASE FITTING AT COMPONENT NUMBER SB-Z-004.

2. APPLY LOCTITE TO SB-Z-016. MISSILE END CLAMP NUT, AS SHOWN AND TORQUE TO 10FT/LB.

1. THE BALLOON SYMBOL, ϴ, CONTAINS THE REFERENCE NUMBER (REF NO) AND QUANTITY (QTY) OF A SPECIFIED COMPONENT IN THIS ASSY. THE UPPER DIGIT IS THE REF NO AND THE LOWER DIGIT IS THE QTY REQUIRED FOR THIS ASSY.

NOTES (UNLESS OTHERWISE SPECIFIED):

UNLESS OTHERWISE SPECIFIED DIMENSIONS ARE IN INCHES
INTERPRET DIMS AND TOLS PER ASME Y14.5-2009
STANDARD TOLERANCES
DECIMALS XX ± .02 XXX ± .005
SURFACE FINISH 63
ANGLES ± 1°
FRACTIONS ± 1/16

MATERIAL: SEE NOTES AND PARTS LIST

FINISH: N/A

DO NOT SCALE DRAWING

DRAWN	ISD	06/08/2022
CHECKED		
QA		
MFG		
APPROVED		

DEMTECH Services, Inc.
Placerville, California

TITLE: [SB-Z-0102/A] ASSY, LOWER SPINDLY SYSTEM, Z-BAR (SPINDLE & BEARING ASSY COMPLETE)

SIZE	DWG NO	REV
D	SB-82205	C

SCALE 1:4 SHEET 1 OF 3

PROPRIETARY DATA NOTICE
This document, prepared exclusively for DEMTECH Services, Inc., is the property of DEMTECH Services, Inc. and as such shall be surrendered to same upon request. This document contains confidential and proprietary information and the data disclosed herein or herewith is not to be reproduced, used, or disclosed in whole or in part to any third person or entity in any manner without prior written permission from DEMTECH Services, Inc..

DWG NO	SH	REV
SB-Z-0102/A	2	C

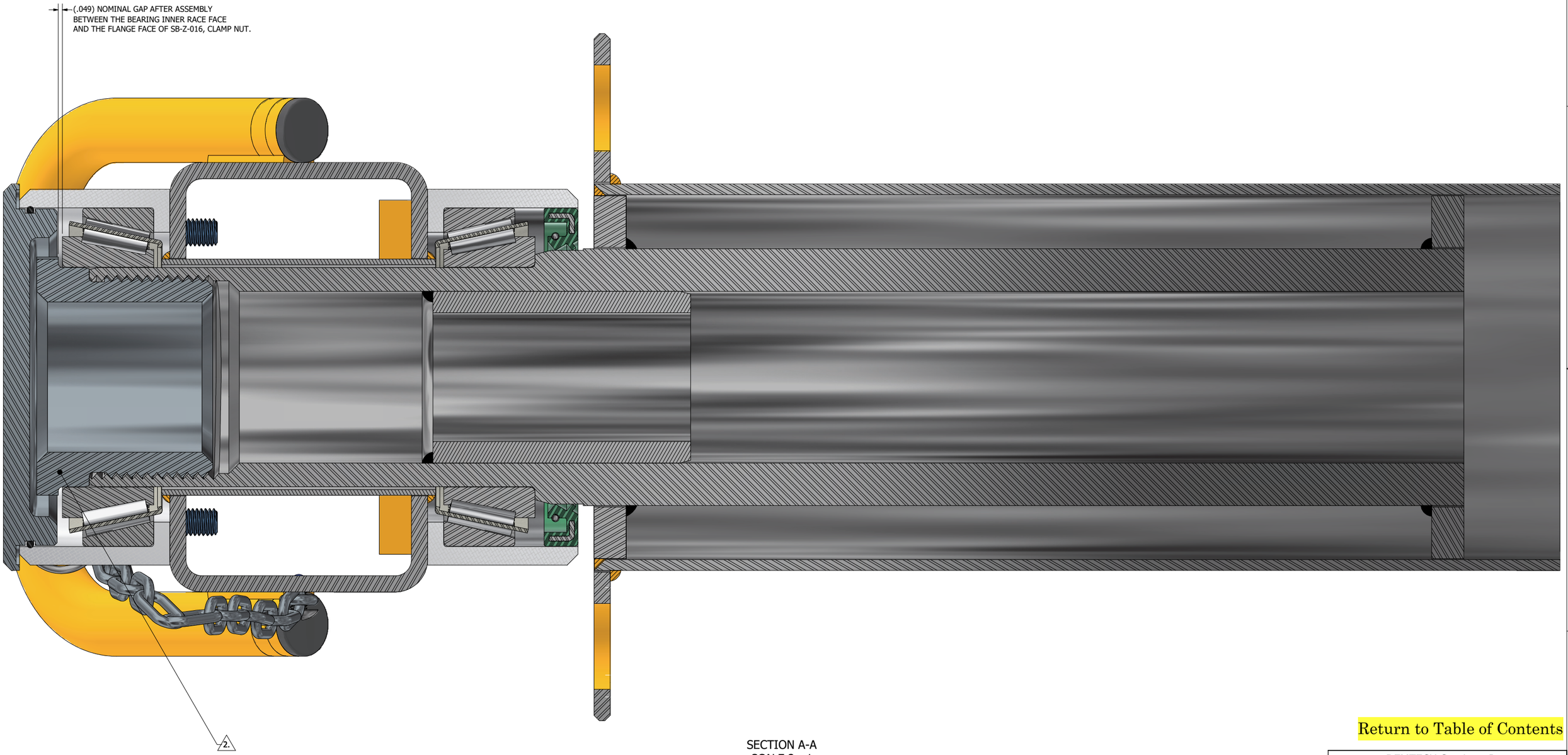

SECTION A-A
SCALE 2 : 1

Return to Table of Contents

DEMTECH Services, Inc.
Placerville, California

TITLE
[SB-Z-0102/A] ASSY, LOWER SPINDLY SYSTEM, Z-BAR (SPINDLE & BEARING ASSY COMPLETE)

SIZE		DWG NO	REV
D		SB-82205	C
SCALE 2:1		SHEET 2 OF 3	

PROPRIETARY DATA NOTICE
This document, prepared exclusively for DEMTECH Services, Inc., is the property of DEMTECH Services, Inc. and as such shall be surrendered to same upon request. This document contains confidential and proprietary information and the data disclosed herein or herewith is not to be reproduced, used, or disclosed in whole or in part to any third person or entity in any manner without prior written permission from DEMTECH Services, Inc..

DWG NO	SH	REV
SB-Z-0102/A	3	C

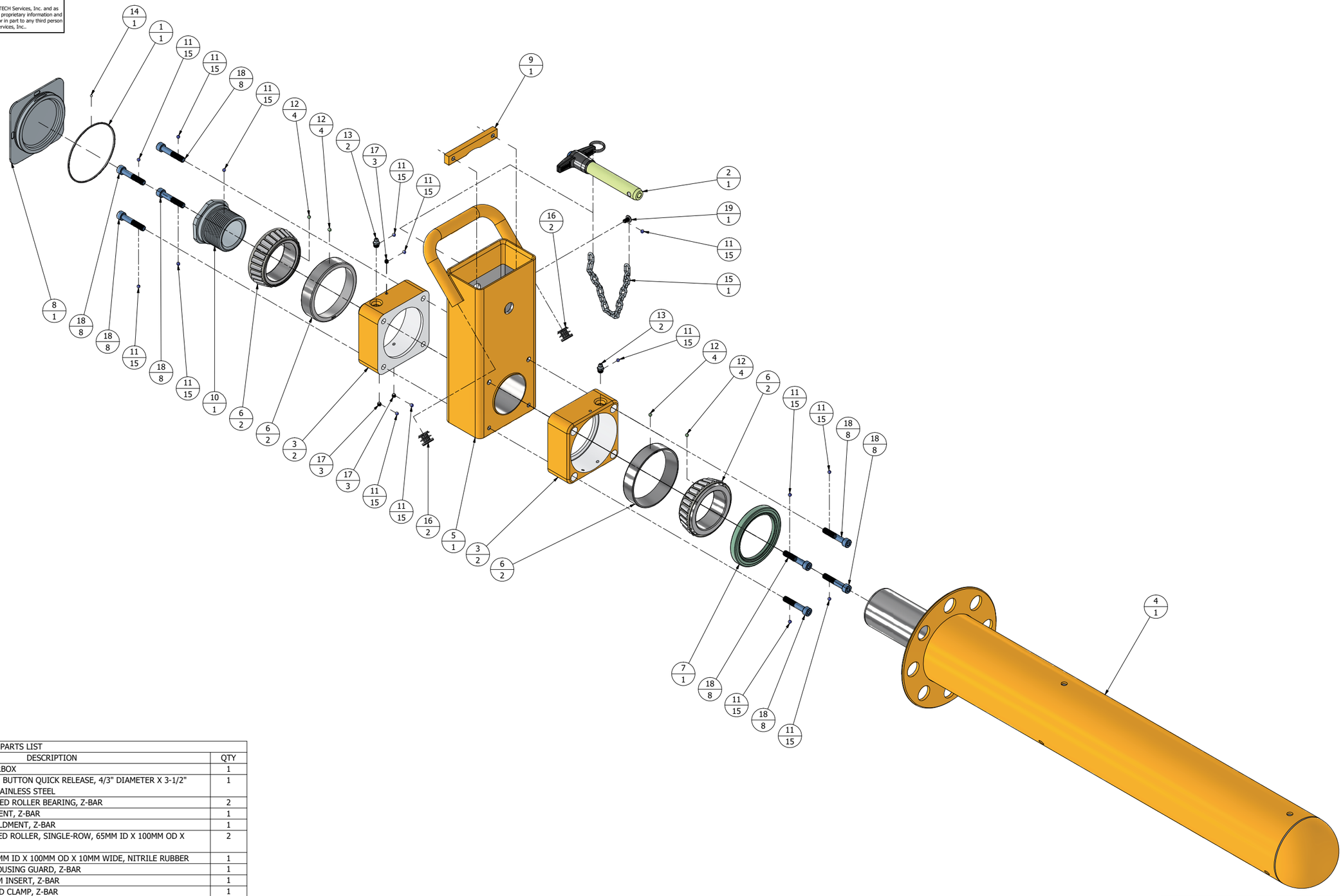

PARTS LIST

REF NO	INVENTORY ID	DESCRIPTION	QTY
1	PX-71432	[600-D24/O] "O" RING, GEARBOX	1
2	SB-75689	[SB-Z-014] HANDLE, T, PUSH BUTTON QUICK RELEASE, 4/3" DIAMETER X 3-1/2" USABLE LENGTH, 17-4 PH STAINLESS STEEL	1
3	SB-82075	[SB-Z-004] HOUSING, TAPERED ROLLER BEARING, Z-BAR	2
4	SB-82101	[SB-Z-003] MISSILE, WELDMENT, Z-BAR	1
5	SB-82155	[SB-Z-002] ARM, LOWER WELDMENT, Z-BAR	1
6	SB-82180	[SB-Z-010] BEARING, TAPERED ROLLER, SINGLE-ROW, 65MM ID X 100MM OD X 27MM WIDE, STEEL	2
7	SB-82185	[SB-Z-011] SEAL, SHAFT, 75MM ID X 100MM OD X 10MM WIDE, NITRILE RUBBER	1
8	SB-82562	[SB-Z-013] CAP, BEARING HOUSING GUARD, Z-BAR	1
9	SB-85205	[SB-Z-007] STOP, UPPER ARM INSERT, Z-BAR	1
10	SB-85215	[SB-Z-016] NUT, MISSILE END CLAMP, Z-BAR	1
11	HARDWARE	ADHESIVE, THREADLOCKING LIQUID, BLUE, THICK MEDIUM STRENGTH	15
12	HARDWARE	ADHESIVE, BEARING RETAINING COMPOUND, GREEN #603	4
13	HARDWARE	FITTING, GREASE, STRAIGHT, M8 X 1.0 MALE X 15mm OAL X 9mm HEX, ZINC PLATED STEEL	2
14	HARDWARE	GREASE, O-RING, SYNTHETIC SILICONE, OR EQUIVALENT	1
15	HARDWARE	CHAIN, LIGHT DUTY, SIZE 4 X 16 LINKS, ZINC PLATED STEEL	1
16	HARDWARE	PLUG, SNAP-IN, 3/4" HEAD DIAMETER, BLACK POLYETHYLENE	2
17	HARDWARE	SCREW, SET, M5 X 0.8 X 6mm LONG, CONE-POINT ALLEN, 18-8 STAINLESS STEEL	3
18	HARDWARE	SCREW, M8 X 1.25mm X 45mm LONG, SOCKET HEAD CAP, CLASS 12.9, BLUE DYED ZINC PLATED ALLOY STEEL	8
19	HARDWARE	SCREW, M5 X 0.8 X 10mm LONG, TRUSS HEAD PHILLIPS, 316 STAINLESS STEEL	1

Return to Table of Contents

DEMTECH Services, Inc.
Placerville, California

TITLE
[SB-Z-0102/A] ASSY, LOWER SPINDLY SYSTEM, Z-BAR (SPINDLE & BEARING ASSY COMPLETE)

SIZE	DWG NO	REV
D	SB-82205	C

SCALE 1:3 SHEET 3 OF 3

PROPRIETARY DATA NOTICE
This document, prepared exclusively for DEMTECH Services, Inc., is the property of DEMTECH Services, Inc. and as such shall be surrendered to same upon request. This document contains confidential and proprietary information and the data disclosed herein or herewith is not to be reproduced, used, or disclosed in whole or in part to any third person or entity in any manner without prior written permission from DEMTECH Services, Inc..

DWG NO	SH	REV
SB-016/A	1	B

REVISION HISTORY

ZONE	REV	DESCRIPTION	DATE	APPROVED
ALL	01	ECO-22034, ENGINEERING PROTOTYPE	06/16/2022	ODM
ALL	A	ECO-22045, RELEASE TO PRODUCTION	10/05/2022	ODM
ALL	B	ECO-25019, INSTAL DIAGRAM ON SHEET 2	09/04/2025	FRK

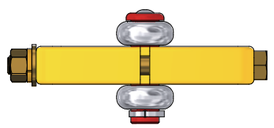

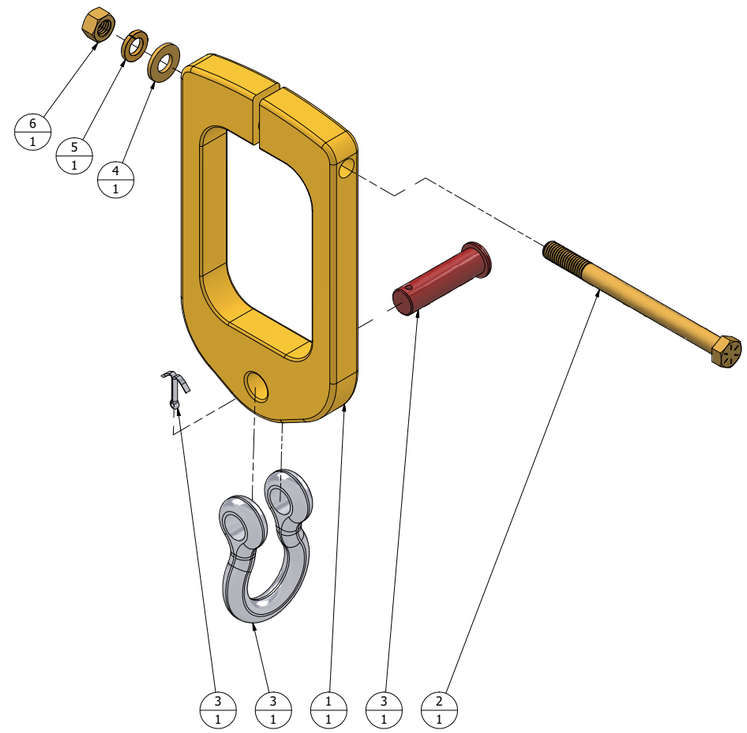

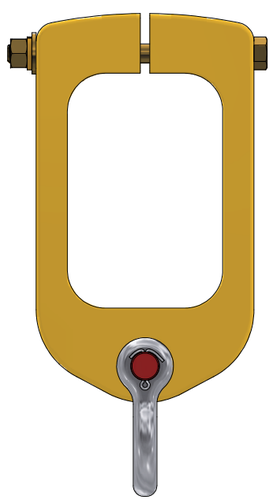

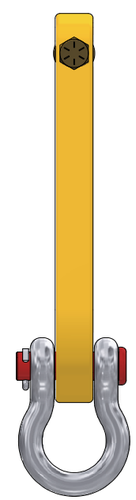

Return to Table of Contents

PARTS LIST

REF NO	INVENTORY ID	DESCRIPTION	QTY
1	SB-73526	[SB-016] (SELL/A) ATTACHMENT, ADJUSTABLE MOUNT, SPREADER-BAR	1
2	SB-82574	[SB-020] BOLT, HEX, 1/2"-13 X 6-1/2", GRADE 8, ZINC YELLOW CHROMATE PLATED	1
3	SB-72510	[SB-M-008] SHACLE, BOLT TYPE, 5/8", 3 1/4" TON WLL	1
4	HARDWARE	WASHER, 1/2" SCREW SIZE, ZINC YELLOW-CHROMATE PLATED	1
5	HARDWARE	WASHER, SPLIT, 1/2", GRADE 8	1
6	HARDWARE	NUT, HEX, GRADE 8, 1/2"-13	1

2. SHEET 2 REFERENCES PROPER INSTALLATION OF THE 2X [SB-016/A] ADJUSTABLE COLLARS ONTO THE [SB-0103/A] SPREADER BAR

1. THE BALLOON SYMBOL, Θ, CONTAINS THE REFERENCE NUMBER (REF NO) AND QUANTITY (QTY) OF A SPECIFIED COMPONENT IN THIS ASSY. THE UPPER DIGIT IS THE REF NO AND THE LOWER DIGIT IS THE QTY REQUIRED FOR THIS ASSY.

NOTES (UNLESS OTHERWISE SPECIFIED):

UNLESS OTHERWISE SPECIFIED DIMENSIONS ARE IN INCHES
INTERPRET DIMS AND TOLS PER ASME Y14.5-2009
STANDARD TOLERANCES
DECIMALS XX ± .02 XXX ± .005
SURFACE FINISH 63
ANGLES ± 1°
FRACTIONS ± 1/16

MATERIAL: SEE PARTS LIST

FINISH: N/A

DO NOT SCALE DRAWING

DRAWN	ODM	06/16/2022
CHECKED		
QA		
MFG		
APPROVED		

DEMTECH Services, Inc.
Placerville, California

TITLE: [SB-016/A] ASSY, ADJUSTABLE COLLAR, SPREADER-BAR

SIZE	DWG NO	REV
D	SB-72620	B

SCALE 1:2 SHEET 1 OF 2

PROPRIETARY DATA NOTICE
This document, prepared exclusively for DEMTECH Services, Inc., is the property of DEMTECH Services, Inc. and as such shall be surrendered to same upon request. This document contains confidential and proprietary information and the data disclosed herein or herewith is not to be reproduced, used, or disclosed in whole or in part to any third person or entity in any manner without prior written permission from DEMTECH Services, Inc..

DWG NO	SH	REV
SB-016/A	2	B

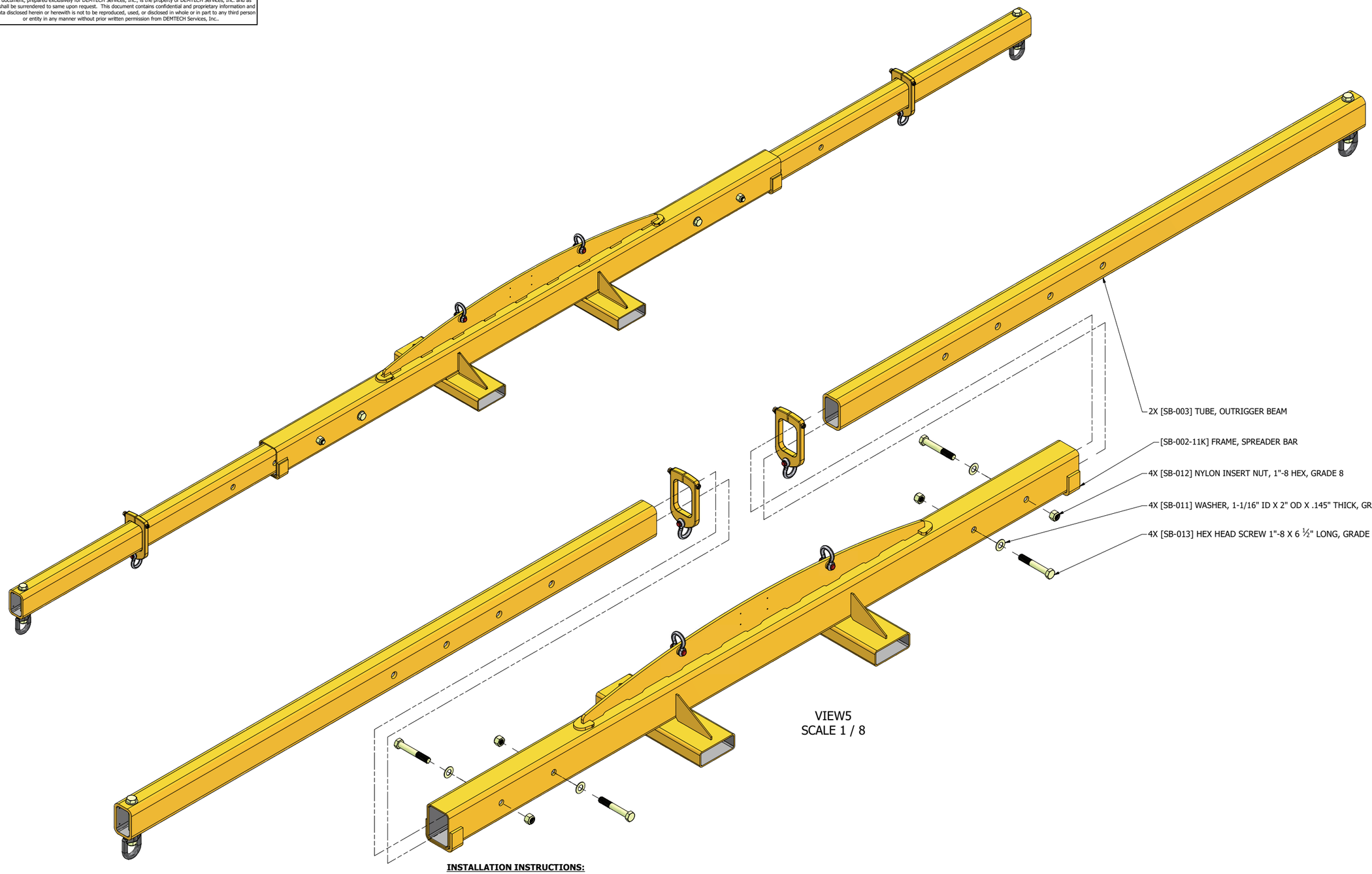

VIEW5
SCALE 1 / 8

INSTALLATION INSTRUCTIONS:

STEP 1- REMOVE THE 4X [SB-013] 1"-8 X 6 ½" LONG HEX HEAD SCREWS, NUTS AND WASHERS.

STEP 2- REMOVE OUTRIGGER BEAMS FROM FRAME.

STEP 3- INSTALL [SB-016/A] ADJUSTABLE COLLARS ONTO OUTRIGGER BEAMS.

STEP 4- RE-INSERT OUTRIGGER BEAMS INTO FRAME.

STEP 5- RE-INSERT THE 4X [SB-013] 1"-8 X 6 ½" LONG HEX HEAD SCREWS, NUTS AND WASHERS. **TORQUE--30FT LBS**

STEP 6- SLIDE [SB-016/A] ADJUSTABLE COLLARS TO DESIRED POSITION EQUAL DISTANCE FROM THE CENTER OF THE SPREADER BAR THEN SECURE BY TIGHTENING NUT AND BOLT. **TORQUE--30FT LBS**

WARNING- FAILURE TO ADJUST COLLARS EQUAL DISTANCE FROM THE CENTER OF SPREADER BAR WILL RESULT IN AN OUT-OF-BALANCE LOAD, CREATING A DANGEROUS WORK ENVIRONMENT AND POSSIBLY DAMAGING THE EQUIPMENT.

Return to Table of Contents

DEMTECH Services, Inc.
Placerville, California

TITLE
[SB-016/A] ASSY, ADJUSTABLE COLLAR, SPREADER-BAR

SIZE	DWG NO	REV
D	SB-72620	B

SCALE 1:10 SHEET 2 OF 2